# BATTERIES AND CHARGERS

Rev. 12/13

158-1634B – K2 LITHIUM – 38.4 Ah

158-1634C – K2 LITHIUM – 51.2 Ah

Battery Quick Disconnects

Red - 158-1407

Blue - 158-1408

## ProNautic® Charger and Accessories

164-8471 -

EXTERNAL BATTERY CHARGER ASSEMBLY – 115V

164-8471 E

EXTERNAL BATTERY CHARGER ASSEMBLY – 230v

DC Power Cord Assembly – 6FT External – 164-8475

# LID AND COVER ASSEMBLY - FLEX

REV. 10/19

| NUMBER | QTY. | PART NUMBER | DESCRIPTION | UOM |
|---|---|---|---|---|
| 1 | 2 | 164-6262 | SLIDING LID MOUNT (CLEANING LID) | EA |
| 2 | 2 | 164-6233 | SLIDING LID MOUNT (CONDITIONING LID) | EA |
| 3 | 4 | 164-2072 | SHCS 8-32 X 3/4 THREAD LOCKING PATCH | EA |
| 4 | 2 | 153-2232L | FLUSH MOUNT LID LATCH (WITH LOCK) | EA |
| 5 | 2 | 164-6164 | LID LATCH BUMPER | EA |
| 6 | 2 | 164-2002 | DETENT - SPRING PLUNGER | EA |
| 7 | 2 | 164-2041 | SHIM FOR SCREW SHOULDER | EA |
| 8 | 8 | 153-2086 | MS PHILLIPS 8-32 X 5/8 | EA |
| 9 | 12 | 153-2002 | FLAT WASHER #8 | EA |
| 10 | 12 | 153-2013 | LOCK WASHER #10 | EA |
| 11 | 2 | 164-2044 | STANDOFF FEMALE THREADED 8-32 X 3/8 | EA |
| 12 | 4 | 153-2027 | JAM NUT 3/8-16 | EA |
| 13 | 2 | 164-2069M | SPRING PLUNGER THREADED | EA |
| 14 | 1 | 164-8234-1525 | FLEX LT SIDE GUARD - BLUE | EA |
| 15 | 1 | 164-8235-1525 | FLEX RT SIDE GUARD - BLUE | EA |
| 16 | 1 | 164-8236A-1525 | FRONT BUMPER - BLUE | EA |
| 17 | 1 | 164-8049-1525 | FLEX BACK PANEL - BLUE | EA |
| 18 | 1 | 164-8230-1525 | SLIDING CLEANER COMPARTMENT LID - BLUE | EA |
| 19 | 1 | 164-8231-1525 | SLIDING LID ASSEMBLY - BLUE | EA |
| 20 | 1 | 164-6733-1525 | LEFT SIDE GUARD FLEX UPPER - BLUE | EA |
| 21 | 1 | 164-6732-1525 | RIGHT SIDE GUARD FLEX UPPER - BLUE | EA |

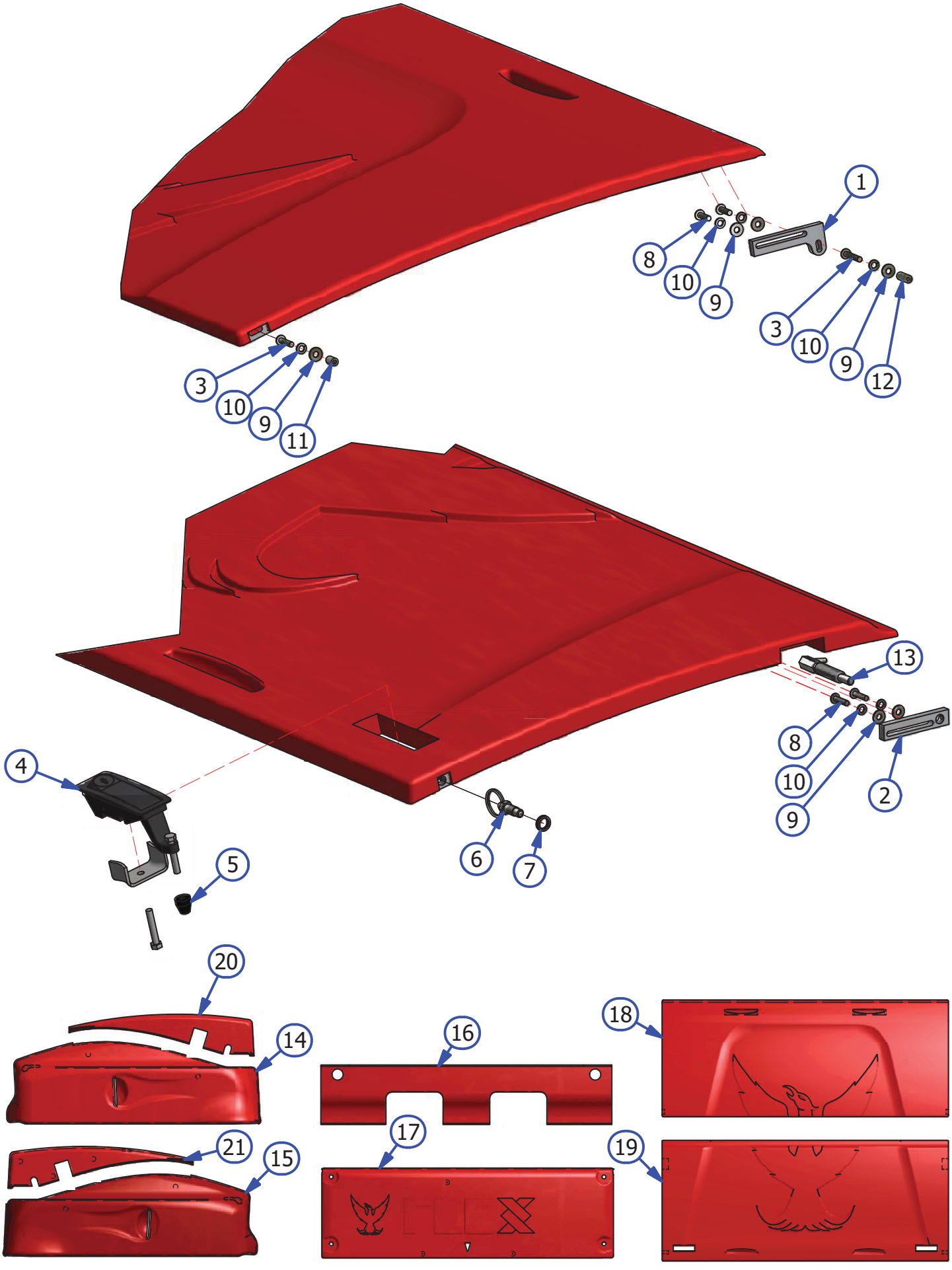
1
8
10
9
3
10
9
12
3
10
9
11
13
8
10
9
2
4
5
6
7
20
14
16
18
21
15
17
19

# PANEL EXPLOSION - FLEX

REV. 9/17

| INDEX NUMBER | QTY. | PART NUMBER | DESCRIPTION | UOM |
|---|---|---|---|---|
| 1 | 4 | 164-2066 | BINDING POST | EA |
| 2 | 4 | 164-8814 | TRANSPORT CASTER ASSEMBLY - COMPLETE | EA |
| | 4 | 153-0001BK | TRANSPORT CASTER - CASTER ONLY | EA |
| | 4 | 153-2017 | 1/2 LOCKWASHER | EA |
| | 4 | 164-2039 | HHCS 1/2-13 X 1 3/4 GRADE 5 | EA |
| 3 | 11 | 153-2953 | FENDER WASHER - #8 | EA |
| 4 | 4 | 164-2038 | RUBBER BUMPER SBR | EA |
| 5 | 4 | 153-2087 | MS PHILLIPS - 8-32 X 3/4 | EA |
| 6 | 3 | 164-2051 | THIN HEX LOCKNUT - 8-32 | EA |
| 7 | 3 | 153-2817 | FHMS-8-32 X 1/2 | EA |
| 8 | 7 | 153-2086 | MS PHILLIPS - 8-32 X 5/8 | EA |
| 9 | 11 | 153-2013 | #10 LOCKWASHER | EA |
| 10 | 4 | 164-2084 | WASHER - OVERSIZED 1/2" | EA |
| 11 | 4 | 164-6252 | TRANSPORT CASTER MOUNT | EA |
| 12 | 8 | 153-2802 | FHSS - 5/16-18 X 5/8" | EA |
| 13 | 4 | 164-2080 | FELT WASHER (BLACK) | EA |

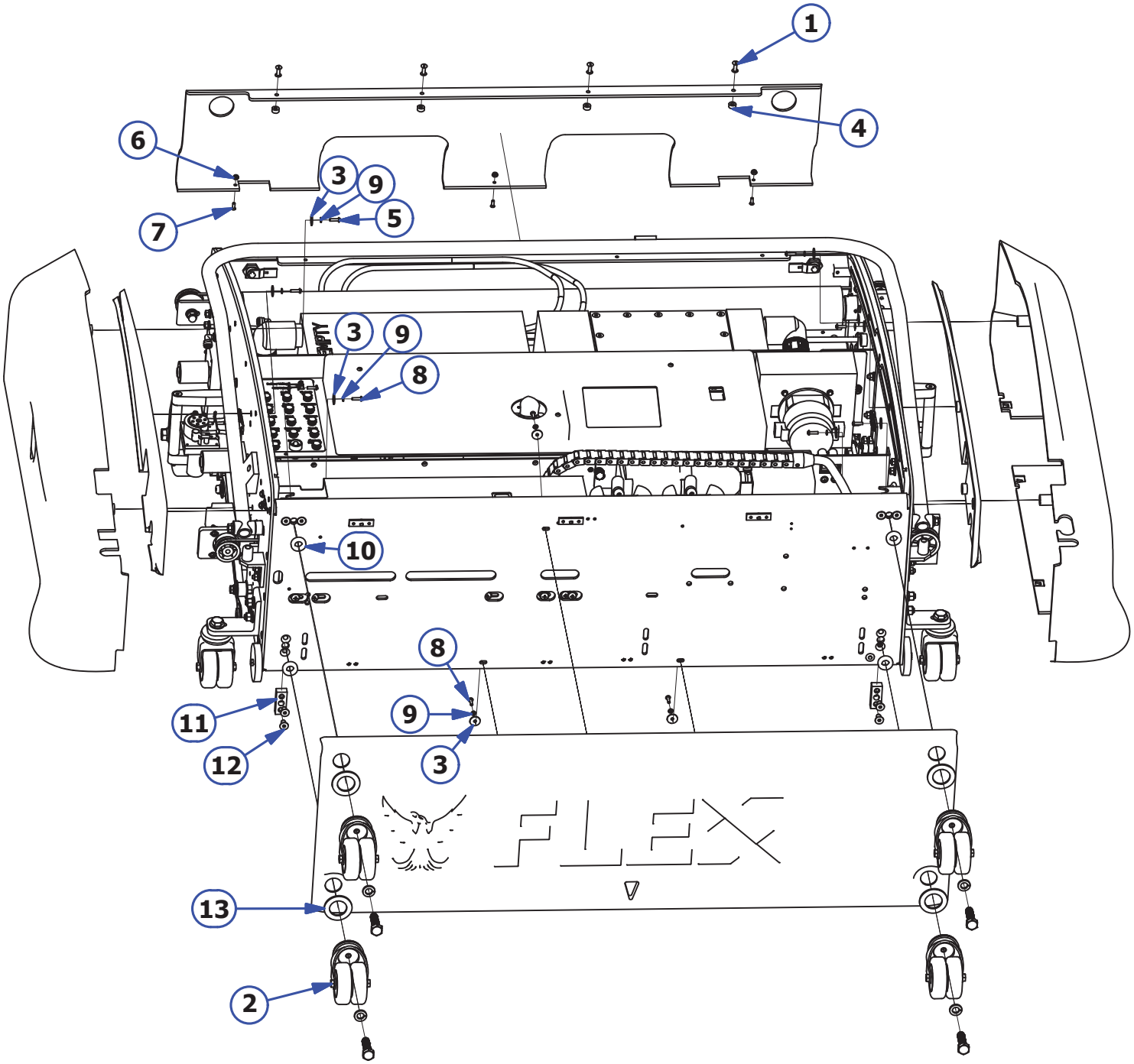
1
4
6
3
9
5
7
3
9
8
10
8
9
3
11
12
13
2
FLEX

# TOP VIEW - FLEX

REV. 10/19

| INDEX NUMBER | QTY. | PART NUMBER | DESCRIPTION | UOM |
|---|---|---|---|---|
| **1** | 1 | 164-8414 | BUFFER MOTOR - 24VDC - 500RPM - STANDARD | EA |
| | 1 | 164-1254 | BUFFER MOTOR BRUSHES (PAIR) | PR |
| | 1 | 164-9016 | BUFFER BELT STANDARD | EA |
| | 1 | 158-9401 | PULLEY (14 TOOTH 1/2" BORE) | EA |
| | 2 | 164-1256 | BRUSH CAP | EA |
| | 2 | 164-1257 | BRUSH SPRING | EA |
| **1** | 1 | 164-8014A | BUFFER MOTOR - 24VDC - 700RPM - VARIABLE BUFFER | EA |
| | 1 | 164-1246 | BUFFER MOTOR BRUSHES (PAIR) | PR |
| | 1 | 164-9017 | BUFFER MOTOR BELT VARIABLE | EA |
| | 1 | 164-9014A | BUFFER MOTOR PULLEY ASSEMBLY | EA |
| | 1 | 164-1256 | BRUSH CAP | EA |
| | 1 | 164-1257 | BRUSH SPRING | EA |
| **2** | 1 | 164-8602A | MAIN DRIVE MOTOR 24V | EA |
| | 1 | 164-1246 | DRIVE MOTOR BRUSHES (PAIR) | PR |
| | 1 | 154-9601 | CHAIN (FOR 153-9002 SPROCKET) | EA |
| | 1 | 153-9047 | MASTER LINK #40 | EA |
| | 1 | 153-9048 | OFFSET LINK #40 | EA |
| | 1 | 153-9002 | SPROCKET - 40B13 (5/8 IN) | EA |
| | 1 | 164-1256 | BRUSH CAP | EA |
| | 1 | 164-1257 | BRUSH SPRING | EA |
| **3** | 1 | 158-8407 | VACUUM MOTOR - 24VDC | EA |
| **4** | 1 | 158-8404D | CLEANER PUMP ASSEMBLY | EA |
| | 1 | 154-0861B | NORPRENE TUBING FOR CLEANER PUMP ASSEMBLY | EA |
| **5** | 1 | 158-8404 | CLEANER PUMP MOTOR - 24VDC | EA |

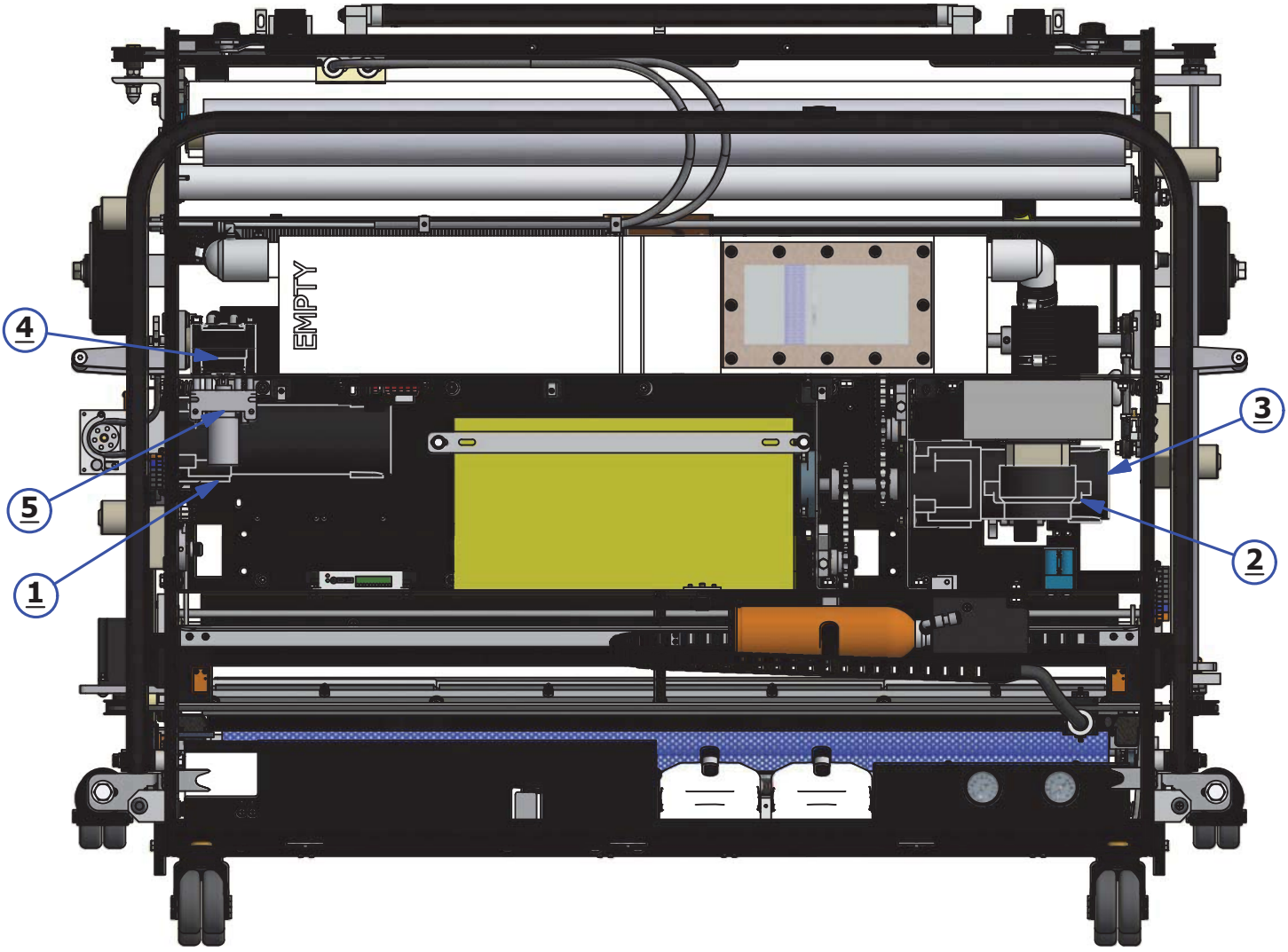
EMPTY
4
5
1
3
2

REV. 2/20

# BOTTOM - FLEX

| INDEX NUMBER | QTY. | PART NUMBER | DESCRIPTION | UOM |
|---|---|---|---|---|
| **1** | 1 | 164-8001A | BUFFER BRUSH ASSEMBLY | EA |
| | 1 | 164-9016 | BUFFER BELT ASSEMBLY - NON-VARIABLE | EA |
| | 1 | 164-9017 | BUFFER BELT ASSEMBLY - VARIABLE BUFF | EA |
| **2** | 2 | 158-8642 | REAR GUIDE WHEEL ASSEMBLY - COMPLETE | EA |
| | | | *THE BELOW ATTACHED PARTS ARE NOT SHOWN* | |
| | 2 | 153-2407 | SHOULDER BOLT 3/8 X 1 3/4 | EA |
| | 2 | 153-2978 | SPRING - COMPRESSION FOR GUIDE WHEEL | EA |
| | 2 | 158-8636 | GUIDE WHEEL ASSEMBLY - REAR | EA |
| **3** | 2 | 158-8643 | FRONT GUIDE WHEEL ASSEMBLY - COMPLETE | EA |
| | | | *THE BELOW ATTACHED PARTS ARE NOT SHOWN* | |
| | 2 | 153-9803 | FLANGED BUSHING - 3/8 X 1/2 X 3/4 | EA |
| | 2 | 153-2978 | SPRING - COMPRESSION FOR GUIDE WHEEL | EA |
| | 2 | 158-8637 | GUIDE WHEEL ASSEMBLY - FRONT | EA |
| **4** | 2 | 158-8636 | GUIDE WHEEL ASSEMBLY - REAR (WHEEL ONLY) | EA |
| **5** | 2 | 158-8637 | GUIDE WHEEL ASSEMBLY - FRONT (WHEEL ONLY) | EA |
| **6** | 2 | 153-7005R | MOMENTARY WHEEL ASSEMBLY (WHEEL ONLY) | EA |
| | 2 | 153-6006 | MOMENTARY WHEEL SHAFT | EA |
| | 2 | 153-6029 | MOMENTARY WHEEL HOUSING ASSEMLBY | EA |
| 7 | | 153-9803 | SKID GUIDE | EA |
| 8 | 4 | 153-7013 | DRIVE WHEEL ASSEMBLY | EA |

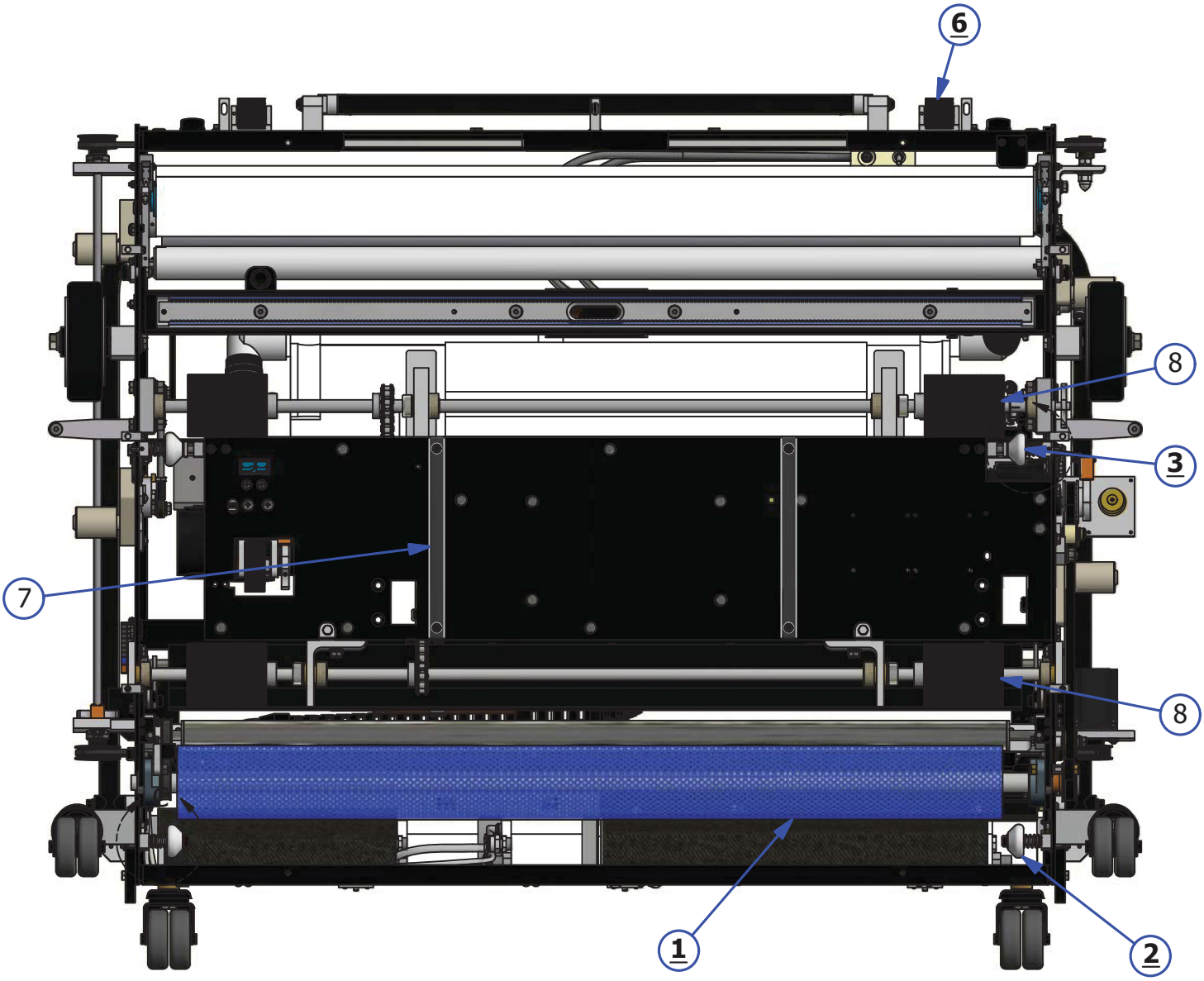


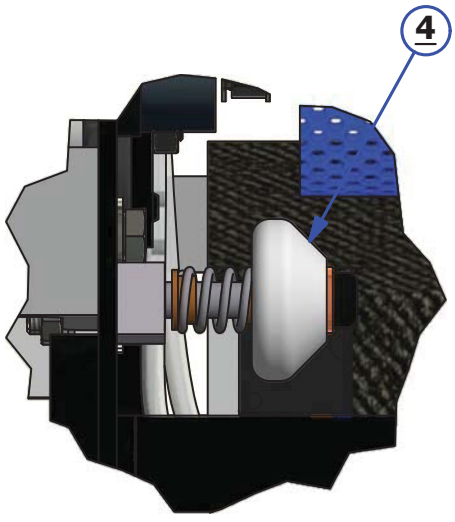


DETAIL A

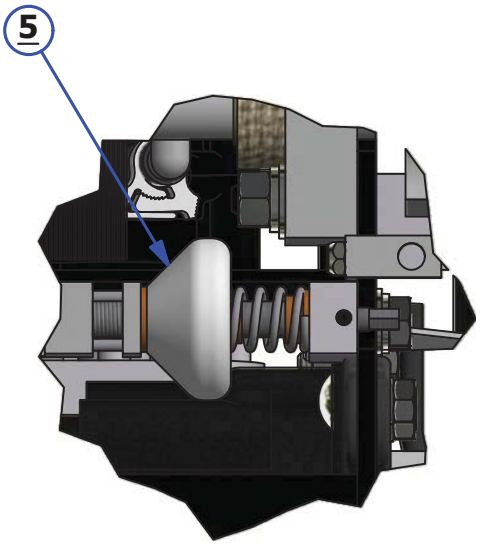


DETAIL B

# LEFT SIDE - FLEX

| INDEX NUMBER | QTY. | PART NUMBER | DESCRIPTION | UOM |
|---|---|---|---|---|
| **1** | 2 | 158-8403 | ASSEMBLY - DUSTER MOTOR 24VDC | EA |
| **2** | 1 | 164-8027 | CLEANER PUMP ASSEMBLY - CONCENTRATE (UPGRADE ONLY) | EA |
| | | 164-8025 | CLEANER TUBING #14 FOR SUPER CONCENTRATE | EA |
| | | 164-8026 | CLEANER TUBING #16 FOR REG CONCENTRATE | EA |
| **3** | 1 | 158-8402 | BUFFER LOWERING MOTOR | EA |
| 4 | 2 | 164-0022 | CASTER ASSEMBLY (3 INCH DUAL WHEEL)- BLACK | EA |
| **5** | 1 | 164-8032 | HEAD DRIVE MOTOR ASSEMBLY | EA |
| 6 | 2 | 158-7002 | 6" WHEEL ASSEMBLY | EA |
| 7 | 1 | 164-9016 | BUFFER BELT ASSEMBLY - STANDARD | EA |
| | 1 | 164-9017 | BUFFER BELT ASSEMBLY - VARIABLE BUFF UPGRADE | EA |
| 8 | 1 | 153-8039 | BUFFER IDLER PULLEY | EA |
| 9 | 2 | 154-8216 | DRIVE MOTOR BEARING BLOCK | EA |
| 10 | 1 | 164-8214 | BUFFER IDLER PULLEY ASSY. (NO CAM) | EA |
| 11 | 2 | 154-1220 | PROXIMITY SENSOR | EA |

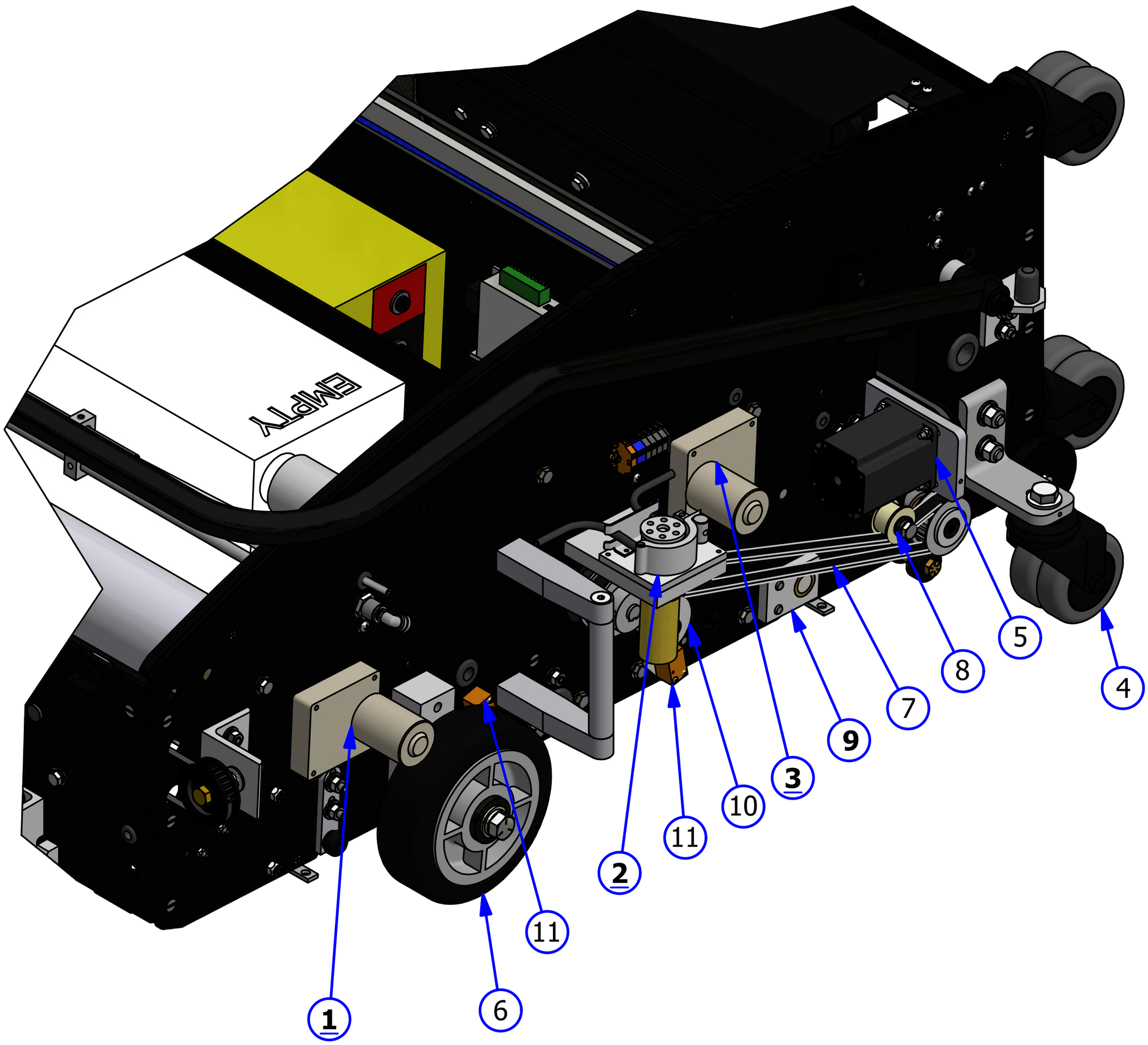
EMPTY
1
2
3
4
5
6
7
8
9
10
11
11
2

# RIGHT SIDE - FLEX

REV. 9/17

| INDEX NUMBER | QTY. | PART NUMBER | DESCRIPTION | UOM |
|---|---|---|---|---|
| **1** | 2 | 158-8402 | SQUEEGEE / BRUSH LIFT MOTOR - 24VDC | EA |
| **2** | 2 | 158-8403 | DUSTER MOTOR ASSEMBLY - 24VDC | EA |
| 3 | 2 | 164-0022 | CASTER ASSEMBLY (3 INCH DUAL WHEEL)- BLACK | EA |
| 4 | 1 | 154-1220 | PROXIMITY SENSOR | EA |
| 5 | 2 | 153-7002 | 6" WHEEL ASSEMBLY | EA |
| 6 | 2 | 164-8216 | REAR DRIVE SHAFT BLOCK | EA |

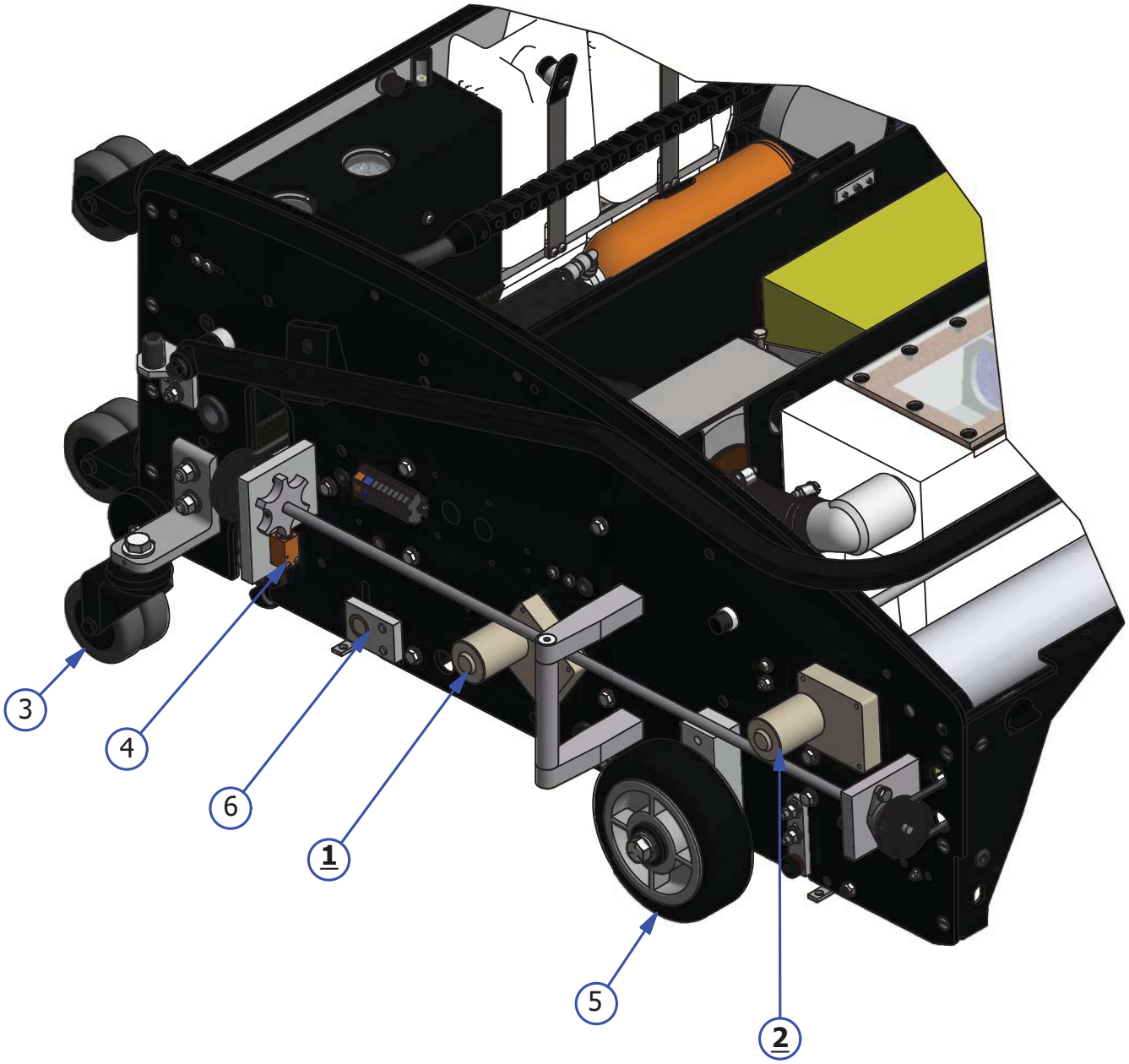
3
4
6
1
5
2

# LDS ASSEMBLY - FLEX

REV. 9/17

| INDEX NUMBER | QTY. | PART NUMBER | DESCRIPTION | UOM |
|---|---|---|---|---|
| **1** | 1 | 164-7001A | LDS WHEEL ASSEMBLY | |
| 1.1 | 2 | 153-2201 | SET SCREW - 10-32 X 3/8 | EA |
| **2** | 1 | 164-8052 | LDS ARM ASSEMBLY | EA |
| 2.1 | 2 | 153-9803 | FLANGED BUSHING (3/8 X 1/2 X 1/4) | EA |
| 2.2 | 2 | 153-9402 | FLANGED BUSHING (3/8 x 1/2 x 1/2) | EA |
| **3** | 1 | 164-6131A | FLEX LDS DISK | EA |
| 3.1 | 1 | 153-2051 | SET SCREW - 1/4-20 X 1/2 | EA |
| 4 | 1 | 154-1220 | INDUCTIVE PROXIMITY SENSOR (TL-Q5MC1) | EA |
| 5 | 2 | 153-2216A | MS PHILLIPS - 4-40 X 7/8 | EA |
| 6 | 1 | 164-6128 | LDS ARM MOUNT | EA |
| 7 | 1 | 153-2051 | SET SCREW - 1/4-20 X 1/2 | EA |
| 8 | 1 | 164-6129 | LDS ARM SHAFT | EA |
| 9 | 1 | 153-2944 | TORSION SPRING - RH | EA |
| 10 | 1 | 153-2945 | TORSION SPRING - LH | EA |
| 11 | 1 | 164-6130 | LDS WHEEL SHAFT | EA |
| 12 | 1 | 153-2009 | NYLON FLAT WASHER (3/8 - 0.060) | EA |
| 13 | 2 | 153-2052A | MS PHILLIPS - 1/4-20 X 3/4 TRUSS HEAD | EA |

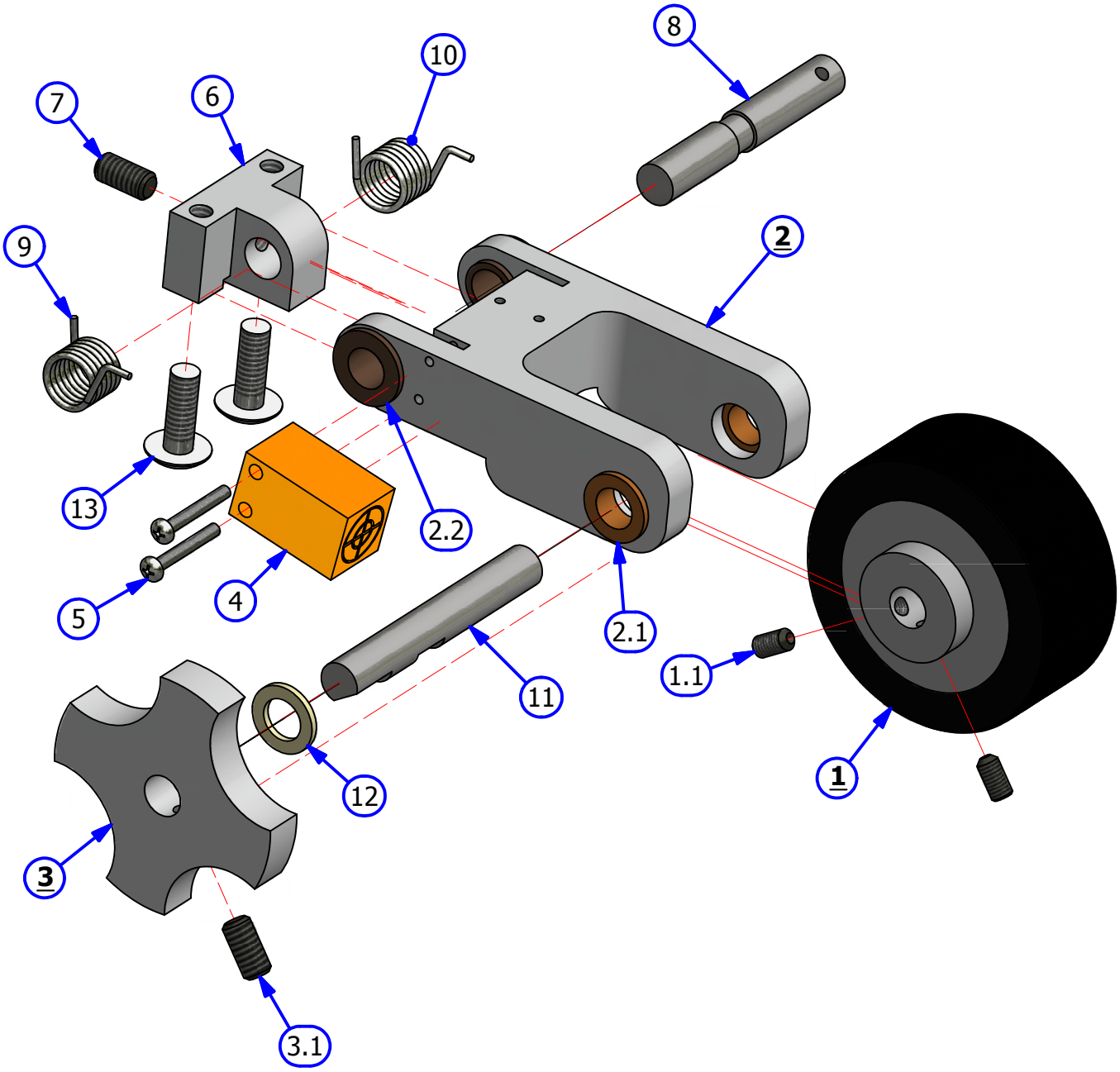
8
10
7
6
9
2
13
2.2
5
4
2.1
1.1
11
12
1
3
3.1

# FRONT HANDLE ASSEMBLY - FLEX

REV. 3/16

| INDEX NUMBER | QTY. | PART NUMBER | DESCRIPTION | UOM |
|---|---|---|---|---|
| 1 | 4 | 153-2052 | HHCS - 1/4-20 X 7/8 | EA |
| 2 | 4 | 153-2014 | 1/4 LOCKWASHER | EA |
| 3 | 4 | 153-2004 | 1/4 FLATWASHER | EA |
| 4 | 1 | 164-8073F | FRONT HANDLE - COMPLETE ASSY | EA |
| 5 | 4 | 153-2996 | SCREW - FHCS 10-24 X 3/4 BLACK OXIDE | EA |
| 6 | 2 | 164-6072 | FRONT HANDLE PLUG | EA |
| 7 | 2 | 164-6087 | FRONT HANDLE BRACKET | EA |
| 8 | 2 | 153-2005 | 5/16 FLATWASHER | EA |
| 9 | 2 | 153-2015 | 5/16 LOCKWASHER | EA |
| 10 | 2 | 164-2045 | BHSCS 5/16-18 X 1-1/4 | EA |

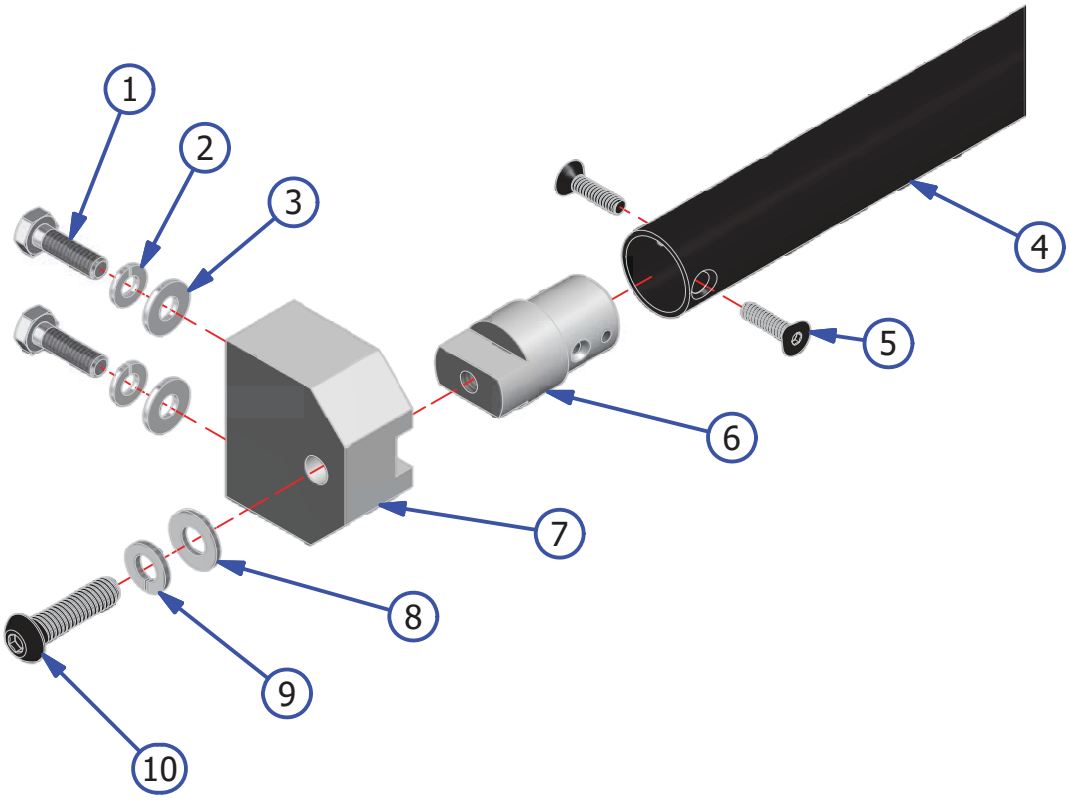
1
2
3
4
5
6
7
8
9
10

# HANDLE ASSEMBLY - FLEX

REV. 9/17

| INDEX NUMBER | QTY. | PART NUMBER | DESCRIPTION | UOM |
|---|---|---|---|---|
| **1** | 1 | 164-8012 | HANDLE ASSEMBLY (COMPLETE) | EA |
| **2** | 1 | 164-8013 | HANDLE BUTTON REPLACEMENT ASSEMBLY (W/WIRES) | EA |
| 3 | 2 | 158-2003 | SCREW 8-32 X 1/2 FHCS BLK OXIDE | EA |
| 4 | 1 | 164-6083 | BUTTON COLLAR | EA |
| 5 | 8 | 153-2023 | 1/4-20 HEX NUT | EA |
| 6 | 8 | 153-2014 | 1/4 LOCKWASHER | EA |
| 7 | 14 | 153-2004 | 1/4 FLATWASHER | EA |
| 8 | 2 | 164-6057 | HANDLE CATCH | EA |
| 9 | 2 | 153-2116 | NYLOCK - 5/16-18 | EA |
| 10 | 2 | 164-6084 | FLEX HANDLE MOUNT | EA |
| 11 | 4 | 153-2802 | FHSS - 5/16-18 X 5/8 | EA |
| 12 | 2 | 164-6058 | FLEX HANDLE SPACER | EA |
| 13 | 4 | 164-2001 | UNTHREADED CURVED SPACER BLACK | EA |
| 14 | 4 | 153-2053A | BHSS - 1/4-20 X 1 | EA |
| 15 | 2 | 153-2089 | MS PHILLIPS - 8-32 X 1 | EA |
| 16 | 2 | 164-8213 | RUBBER BUMPER-3/4 DIA X 1 HIGH | EA |
| 17 | 2 | 164-2028 | HHSCS 5/16-18 X 3 PARTIAL THREAD | EA |
| 18 | 2 | 164-6081 | FLEX HANDLE BUMPER MT | EA |
| 19 | 4 | 153-2053 | HHCS - 1/4-20 X 1 | EA |
| 20 | 2 | 164-6946 | POLYURETHANE BUMPER PLUG | EA |

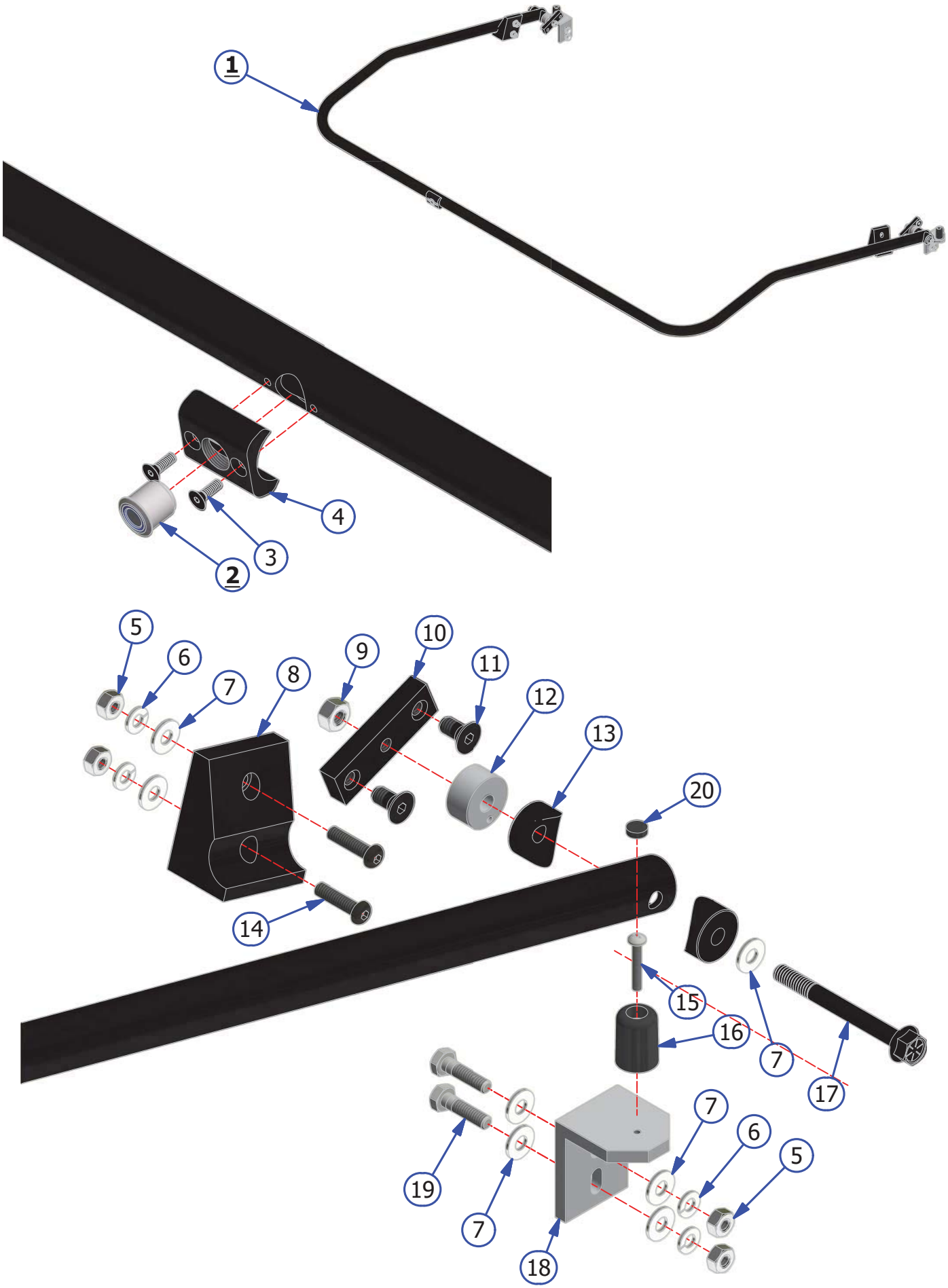
1
2
3
4
5
6
7
8
9
10
11
12
13
14
15
16
17
18
19
20

# LID AND COVER ASSEMBLY - FLEX WALKER

REV. 10/19

| INDEX NUMBER | QTY. | PART NUMBER | DESCRIPTION | UOM |
|---|---|---|---|---|
| 1 | 2 | 164-6262 | SLIDING LID MOUNT (CLEANING LID) | EA |
| 2 | 2 | 164-6233 | SLIDING LID MOUNT (CONDITIONING LID) | EA |
| 3 | 4 | 164-2072 | SHCS 8-32 X 3/4 THREAD LOCKING PATCH | EA |
| 4 | 2 | 153-2232L | FLUSH MOUNT LID LATCH (WITH LOCK) | EA |
| 5 | 2 | 164-6164 | LID LATCH BUMPER | EA |
| 6 | 2 | 164-2002 | DETENT - SPRING PLUNGER | EA |
| 7 | 2 | 164-2041 | SHIM FOR SCREW SHOULDER | EA |
| 8 | 8 | 153-2086 | MS PHILLIPS 8-32 X 5/8 | EA |
| 9 | 12 | 153-2002 | FLAT WASHER #8 | EA |
| 10 | 12 | 153-2013 | LOCK WASHER #10 | EA |
| 11 | 2 | 164-2044 | STANDOFF FEMALE THREADED 8-32 X 3/8 | EA |
| 12 | 4 | 153-2027 | JAM NUT 3/8-16 | EA |
| 13 | 2 | 164-2069M | SPRING PLUNGER THREADED | EA |
| 14 | 1 | 164-8232-2850 | FLEX WALKER LT SIDE GUARD - BLACK | EA |
| 15 | 1 | 164-8233-2850 | FLEX WALKER RT SIDE GUARD - BLACK | EA |
| 16 | 1 | 164-8236A-2850 | FRONT BUMPER - BLACK | EA |
| 17 | 1 | 164-8049-2850 | FLEX BACK PANEL - BLACK | EA |
| 18 | 1 | 164-8231-2850 | SLIDING CLEANER COMPARTMENT LID - BLACK | EA |
| 19 | 1 | 164-8231-2850 | SLIDING LID ASSEMBLY - BLACK | EA |

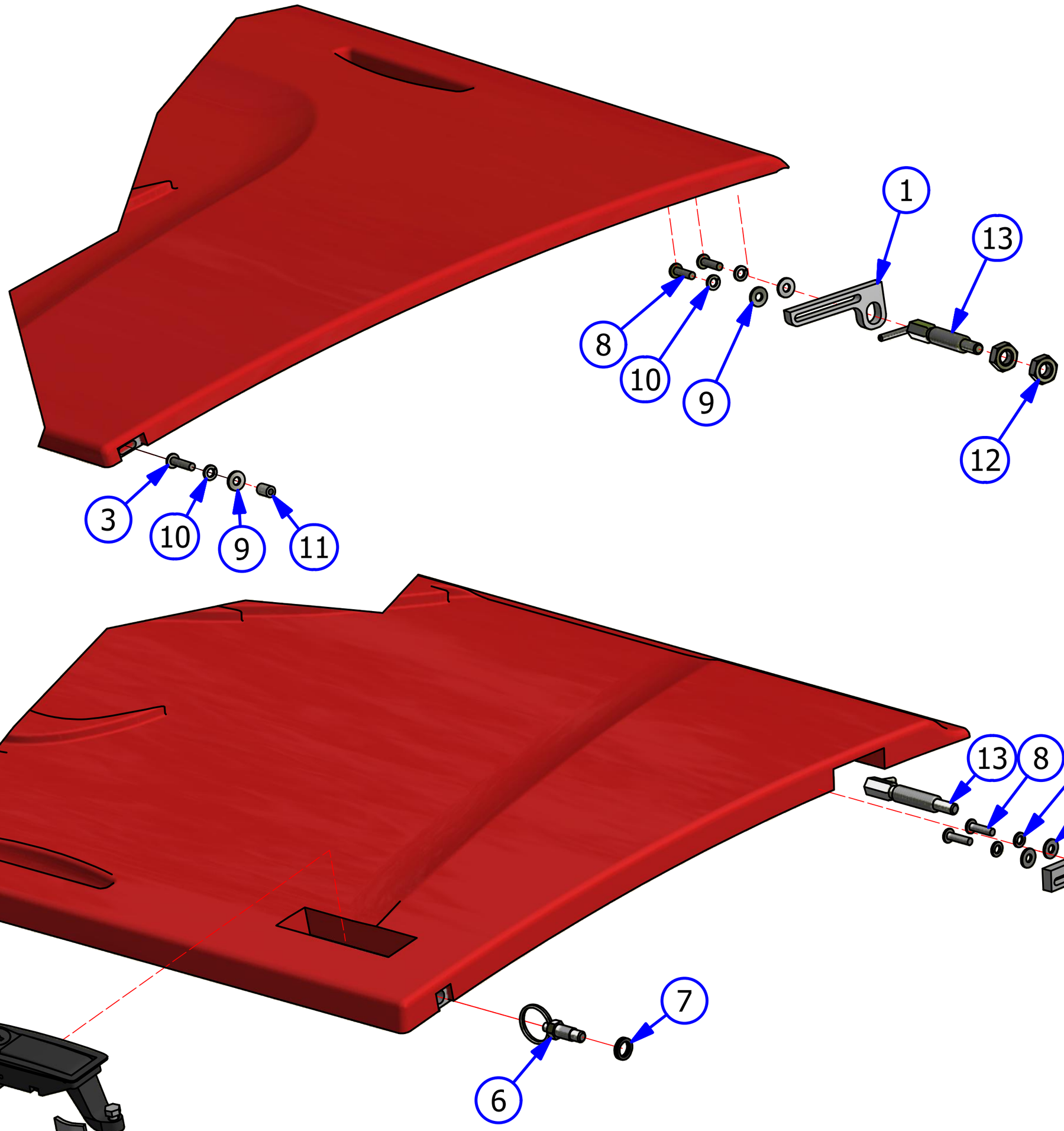
1
13
8
10
9
12
3
10
9
11
13
8
10
9
2
4
6
7

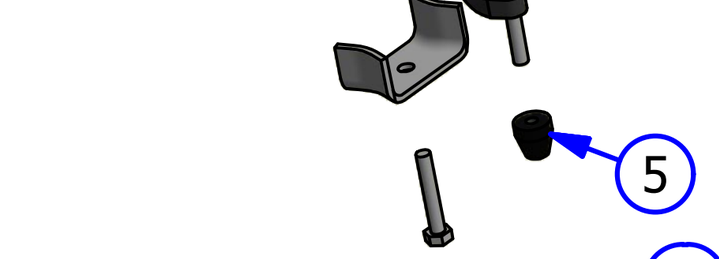
5

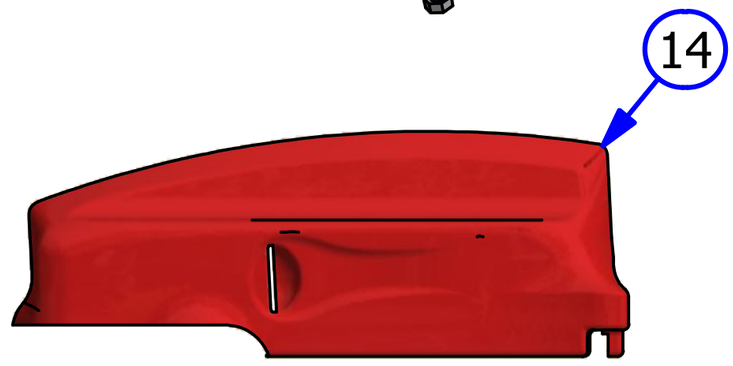
14

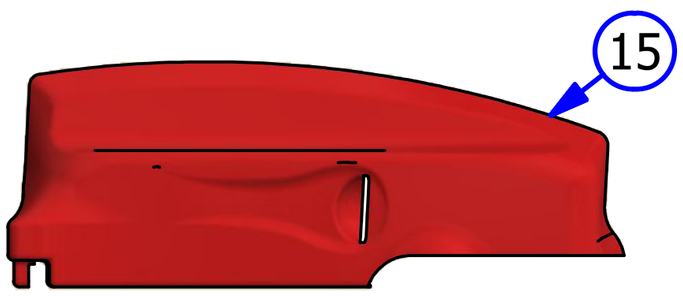
15

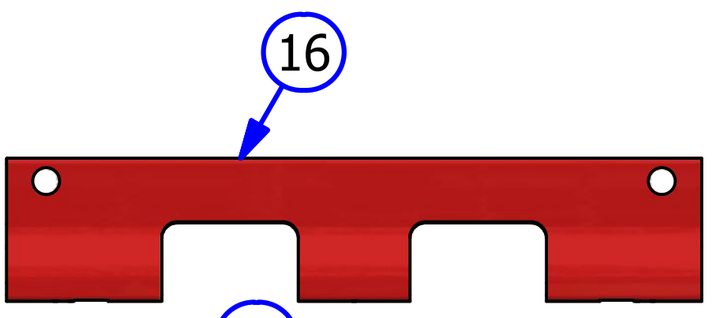
16

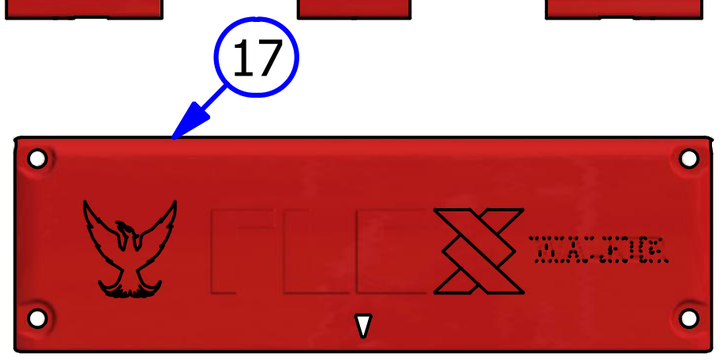
17

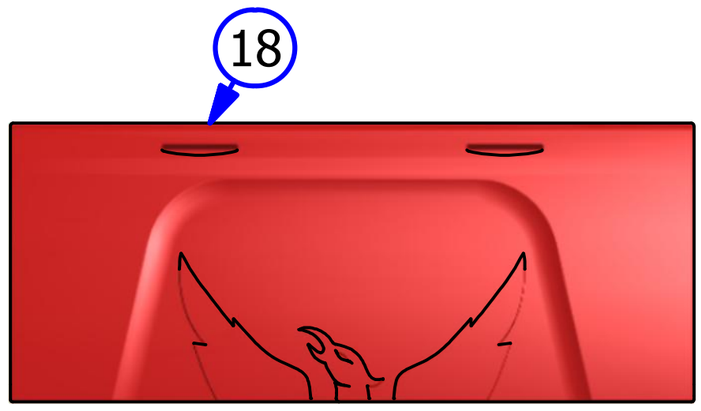
18

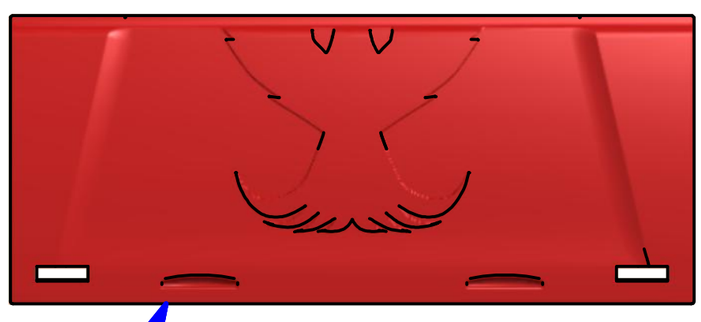
19

# PANEL EXPLOSION - FLEX WALKER

REV. 9/17

| INDEX NUMBER | QTY. | PART NUMBER | DESCRIPTION | UOM |
|---|---|---|---|---|
| 1 | 4 | 164-2066 | BINDING POST | EA |
| 2 | 4 | 164-8814 | TRANSPORT CASTER ASSEMBLY - COMPLETE | EA |
| | 6 | 153-0001BK | TRANSPORT CASTER - CASTER ONLY | EA |
| | 4 | 153-2017 | 1/2 LOCKWASHER | EA |
| | 4 | 164-2039 | HHCS 1/2-13 X 1 3/4 GRADE 5 | EA |
| 3 | 9 | 153-2953 | FENDER WASHER - #8 | EA |
| 4 | 4 | 164-2038 | RUBBER BUMPER SBR | EA |
| 5 | 4 | 153-2087 | MS PHILLIPS - 8-32 X 3/4 | EA |
| 6 | 3 | 164-2051 | THIN HEX LOCKNUT - 8-32 | EA |
| 7 | 3 | 153-2817 | FHMS-8-32 X 1/2 | EA |
| 8 | 7 | 153-2086 | MS PHILLIPS - 8-32 X 5/8 | EA |
| 9 | 11 | 153-2013 | #10 LOCKWASHER | EA |
| 10 | 4 | 164-2084 | WASHER - OVERSIZED 1/2" | EA |
| 11 | 4 | 164-6252 | TRANSPORT CASTER MOUNT | EA |
| 12 | 8 | 153-2802 | FHSS - 5/16-18 X 5/8" | EA |
| 13 | 4 | 164-2080 | FELT WASHER (BLACK) | EA |

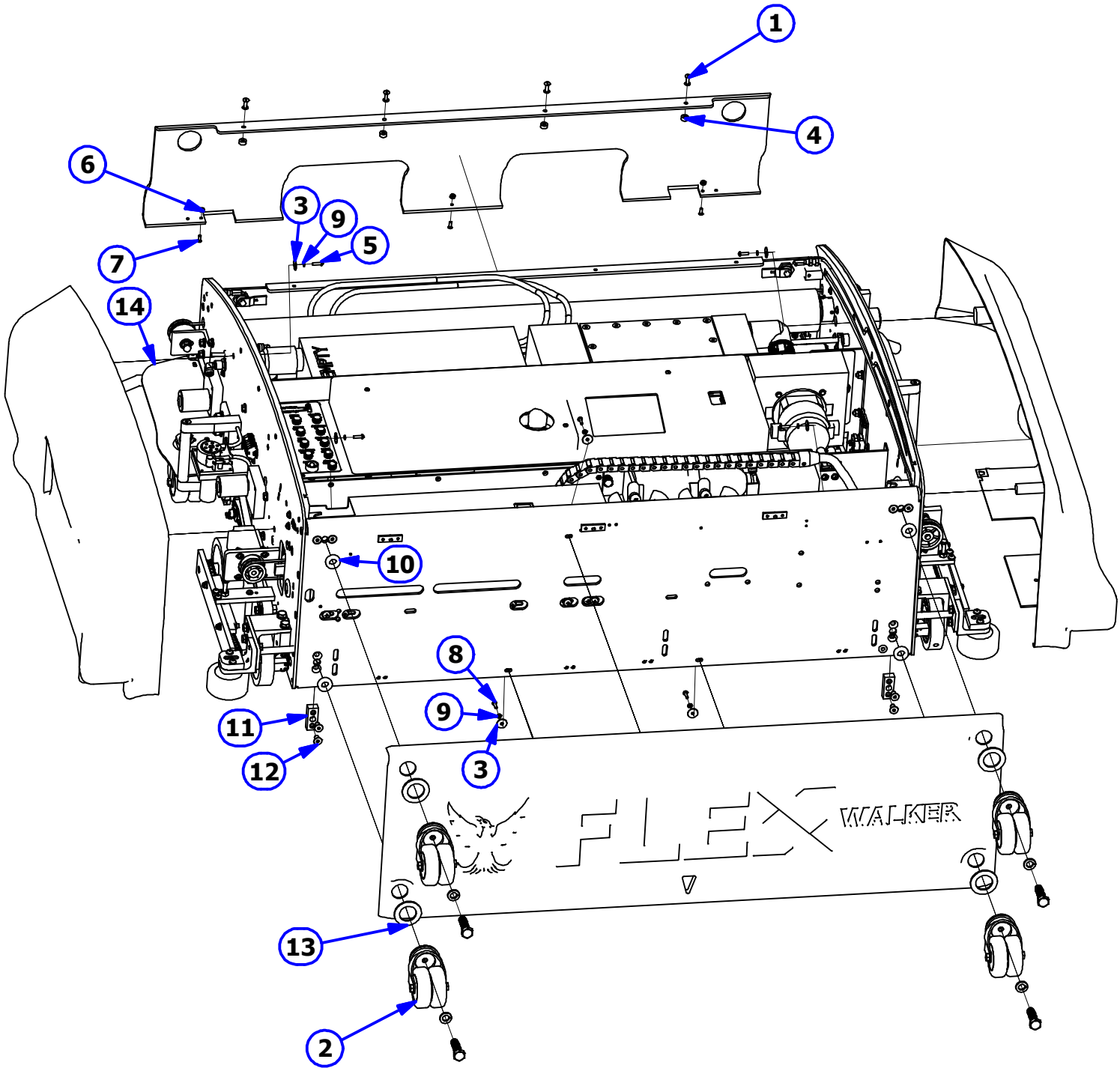
1
4
6
3
9
5
7
14
10
8
9
11
12
3
13
2
FLEX
WALKER

# TOP VIEW - FLEX WALKER

REV. 10/19

| INDEX NUMBER | QTY. | PART NUMBER | DESCRIPTION | UOM |
|---|---|---|---|---|
| **1** | 1 | 164-8414 | BUFFER MOTOR - 24VDC - 500RPM - STANDARD | EA |
| | 1 | 164-1254 | BUFFER MOTOR BRUSHES (PAIR) | PR |
| | 1 | 164-9016 | BUFFER BELT | EA |
| | 1 | 158-9401 | PULLEY (14 TOOTH 1/2" BORE) | EA |
| | 1 | 164-1256 | BRUSH CAP | EA |
| | 1 | 164-1257 | BRUSH SPRING | EA |
| **1** | 1 | 164-8014A | BUFFER MOTOR - 24VDC - 700RPM - VARIABLE BUFFER | EA |
| | 1 | 164-1246 | BUFFER MOTOR BRUSHES (PAIR) | PR |
| | 1 | 164-9017 | BUFFER MOTOR BELT | EA |
| | 1 | 164-9014A | BUFFER MOTOR PULLEY ASSEMBLY | EA |
| | 1 | 164-1256 | BRUSH CAP | EA |
| | 1 | 164-1257 | BRUSH SPRING | EA |
| **2** | 1 | 164-8602A | RIGHT MAIN DRIVE MOTOR 24V | EA |
| **2** | 1 | 164-8602 | LEFT DRIVE MOTOR 24V | EA |
| | 1 | 164-1246 | DRIVE MOTOR BRUSHES (PAIR) | PR |
| | 1 | 154-9601 | CHAIN (FOR 153-9002, INSIDE AND OUTSIDE SPROCKET) | EA |
| | 1 | 153-9444 | CHAIN (FOR 153-9003, MIDDLE SPROCKET) | EA |
| | 1 | 153-9047 | MASTER LINK #40 | EA |
| | 1 | 153-9048 | OFFSET LINK #40 | EA |
| | 1 | 153-9002 | SPROCKET - 40B13 (5/8 IN) INSIDE AND OUTSIDE SPROCKET | EA |
| | 1 | 153-9003 | SPROCKET - 40B10 (5/8 IN) INSIDE AND OUTSIDE SPROCKET | EA |
| | 1 | 164-1256 | BRUSH CAP | EA |
| | 1 | 164-1257 | BRUSH SPRING | EA |
| **4** | 1 | 158-8404D | CLEANER PUMP ASSEMBLY | EA |
| | 1 | 154-0861B | NORPRENE TUBING FOR CLEANER PUMP ASSEMBLY | EA |
| **5** | 1 | 158-8404 | CLEANER PUMP MOTOR - 24VDC | EA |

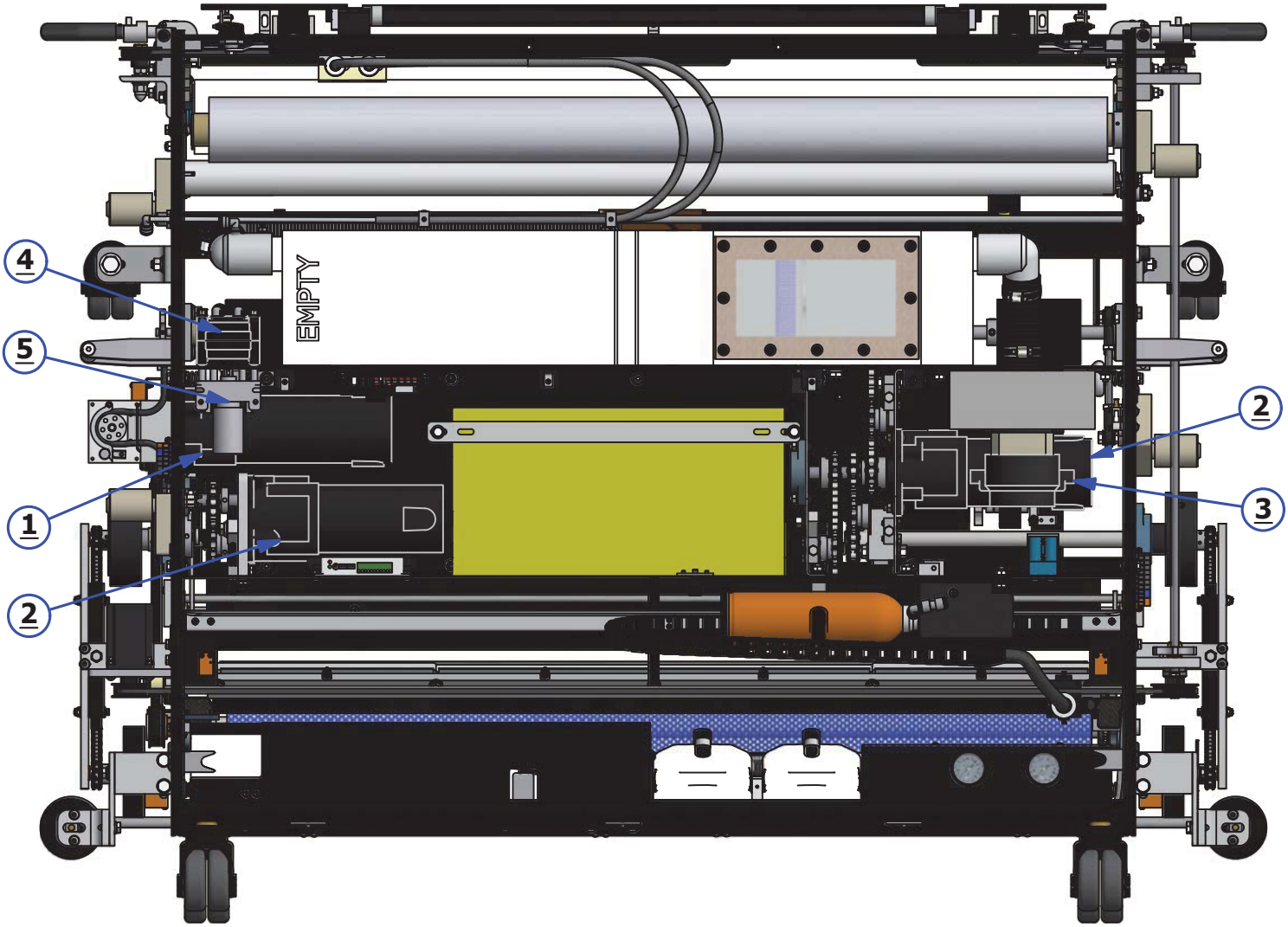
EMPTY
4
5
1
2
2
3

# BOTTOM - FLEX WALKER

REV. 2/20

| INDEX NUMBER | QTY. | PART NUMBER | DESCRIPTION | UOM |
|---|---|---|---|---|
| **1** | 1 | 164-8001A | BUFFER BRUSH ASSEMBLY | EA |
| | 1 | 164-9016 | BUFFER BELT ASSEMBLY NON-VARIABLE | EA |
| | 1 | 154-9617 | BUFFER BELT ASSEMBLY - VARIABLE BUFF | EA |
| **2** | 2 | 158-8642 | REAR GUIDE WHEEL ASSEMBLY - COMPLETE | EA |
| | | | *THE BELOW ATTACHED PARTS ARE NOT SHOWN* | |
| | 2 | 153-2407 | SHOULDER BOLT 3/8 X 1 3/4 | EA |
| | 2 | 153-2978 | SPRING - COMPRESSION FOR GUIDE WHEEL | EA |
| | 2 | 158-8636 | GUIDE WHEEL ASSEMBLY - REAR | EA |
| **3** | 2 | 158-8643 | FRONT GUIDE WHEEL ASSEMBLY - COMPLETE | EA |
| 3.1 | 2 | 153-9803 | FLANGED BUSHING - 3/8 X 1/2 X 3/4 | EA |
| 3.2 | 2 | 153-2978 | SPRING - COMPRESSION FOR GUIDE WHEEL | EA |
| 3.3 | 2 | 158-8637 | GUIDE WHEEL ASSEMBLY - REAR | EA |
| **4** | 2 | 158-8636 | GUIDE WHEEL ASSEMBLY - REAR (WHEEL ONLY) | EA |
| **5** | 2 | 158-8637 | GUIDE WHEEL ASSEMBLY - FRONT (WHEEL ONLY) | EA |
| **6** | 2 | 153-7005R | MOMENTARY WHEEL ASSEMBLY (WHEEL ONLY) | EA |
| | 2 | 153-6006 | MOMENTARY WHEEL SHAFT | EA |
| | 2 | 164-6053 | MOMENTARY WHEEL HOUSING ASSEMLBY | EA |
| 7 | 2 | 153-9803 | SKID GUIDE | EA |
| 8 | 4 | 153-7013 | DRIVE WHEEL ASSEMBLY | EA |

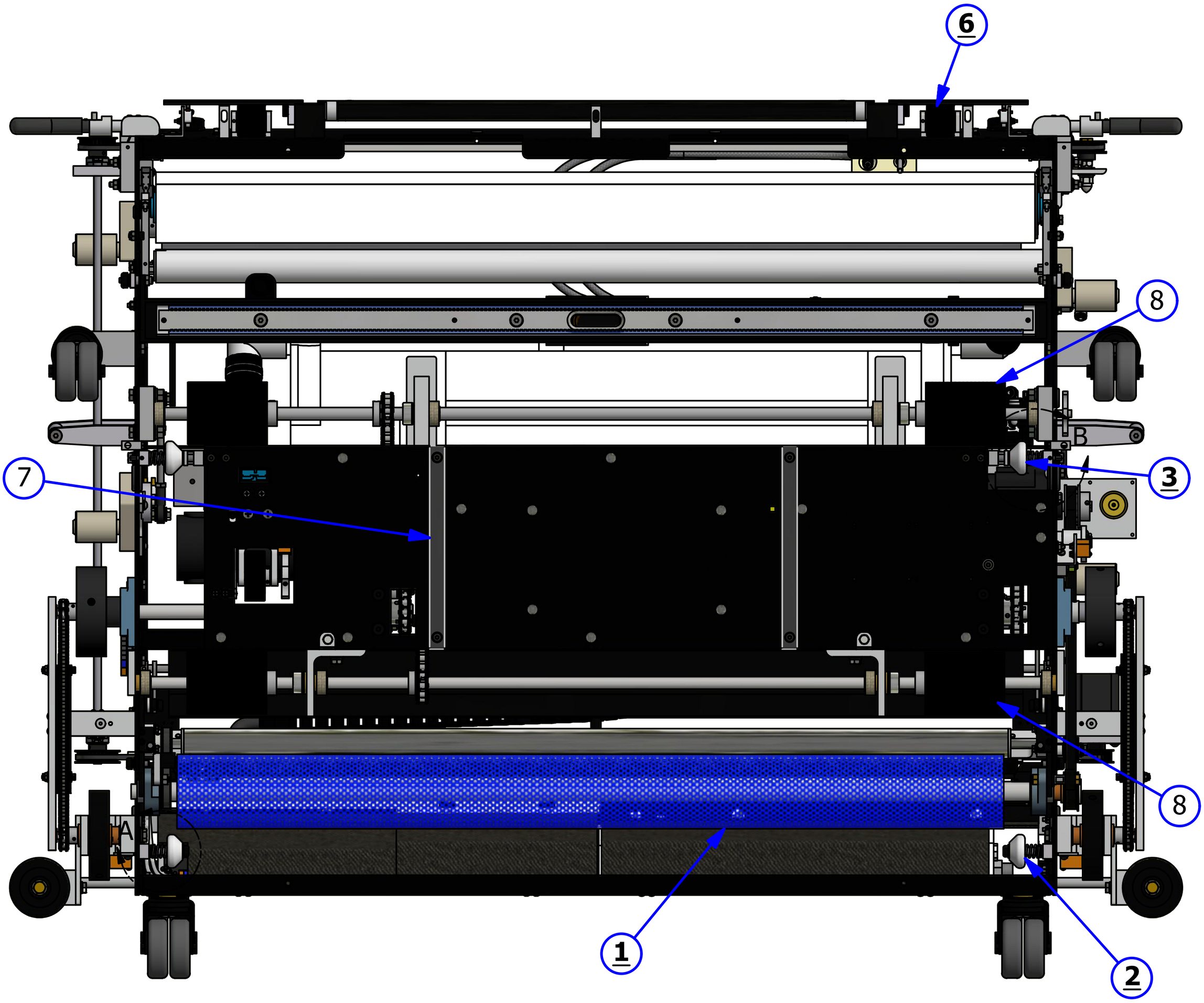


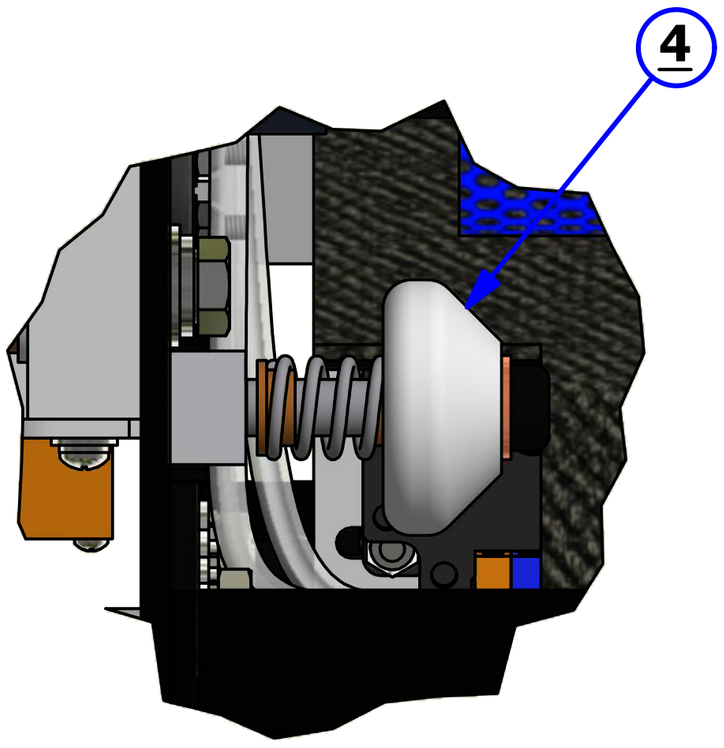


DETAIL A

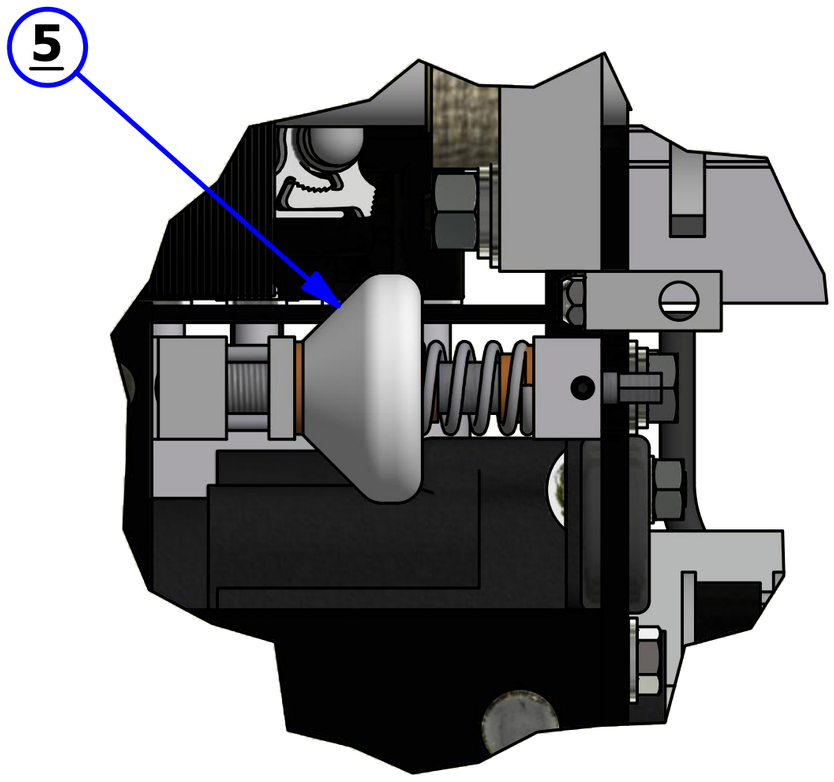


DETAIL B

# LEFT SIDE - FLEX WALKER

REV. 10/18

| INDEX NUMBER | QTY. | PART NUMBER | DESCRIPTION | UOM |
|---|---|---|---|---|
| **1** | 2 | 158-8403 | ASSEMBLY - DUSTER MOTOR 24VDC | EA |
| **2** | 1 | 164-8027 | CLEANER PUMP ASSEMBLY - CONCENTRATE (UPGRADE ONLY) | EA |
| | | 164-8025 | CLEANER TUBING #14 FOR SUPER CONCENTRATE | EA |
| | | 164-8026 | CLEANER TUBING #16 FOR REG CONCENTRATE | EA |
| **3** | 1 | 158-8402 | BUFFER LOWERING MOTOR | EA |
| **4** | 1 | 164-8032 | HEAD DRIVE MOTOR ASSEMBLY | EA |
| 5 | 6 | 153-0001BK | CASTER ASSEMBLY (3 INCH DUAL WHEEL)- BLACK | EA |
| 6 | 1 | 164-9016 | BUFFER BELT ASSEMBLY - STANDARD | EA |
| | 1 | 164-9017 | BUFFER BELT ASSEMBLY - VARIABLE BUFF UPGRADE | EA |
| 7 | 2 | 153-7203 | BUMPER WHEEL ASSEMBLY | EA |
| 8 | 1 | 164-9005 | #35 CHAIN ZTR KICKUP | EA |
| | 1 | 153-9046 | MASTER LINK #35 (NOT SHOWN) | EA |
| 9 | 1 | 153-8039 | BUFFER IDLER PULLEY | EA |
| 10 | 1 | 164-8216 | DRIVE MOTOR BEARING BLOCK | EA |
| 11 | 1 | 164-8214 | BUFFER IDLER PULLEY ASSY. (NO CAM) | EA |
| 12 | 1 | 154-1220 | PROXIMITY SENSOR | EA |
| 13 | 1 | 154-1220 | PROXIMITY SENSOR | EA |

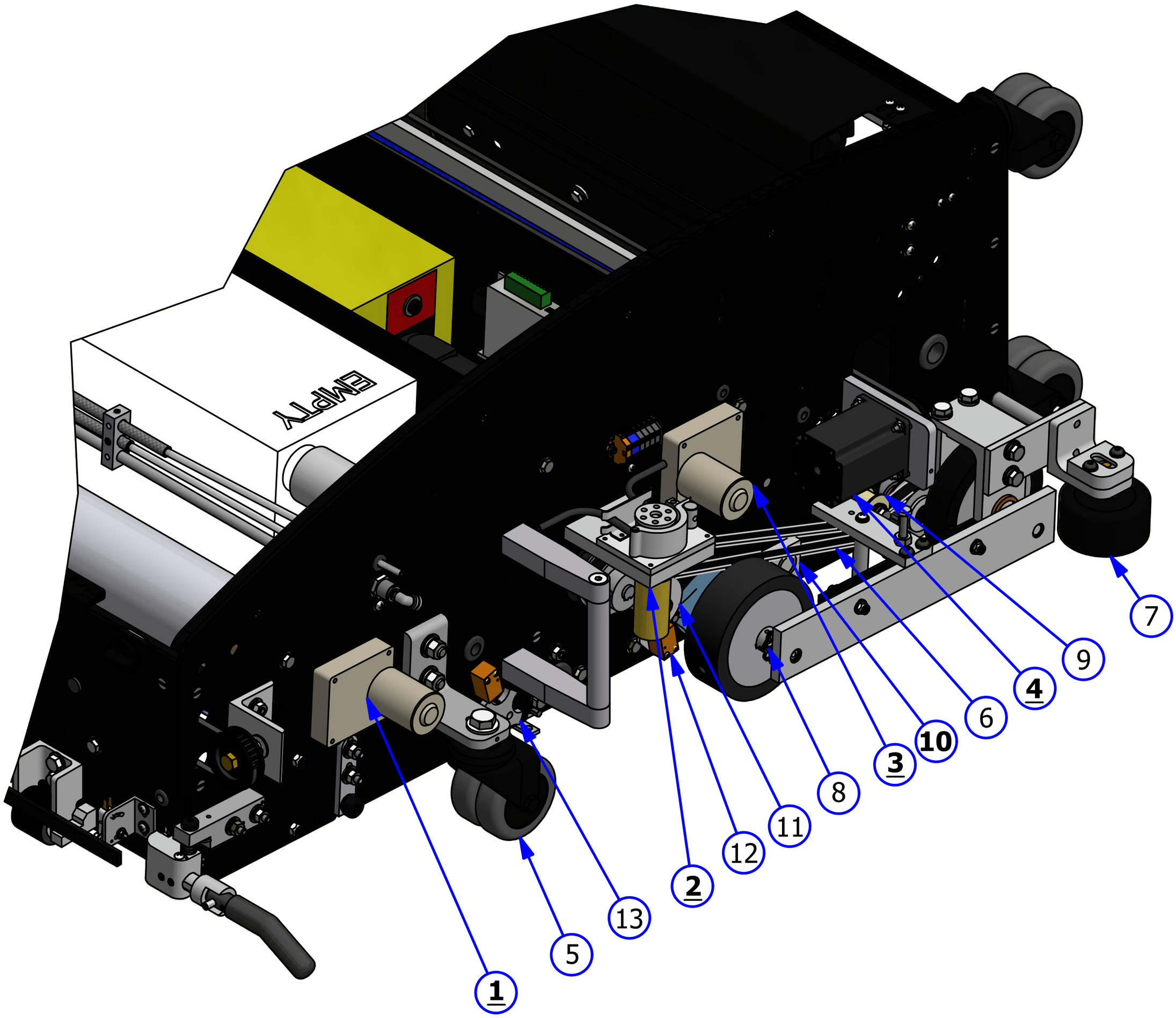
EMPTY
7
9
4
6
10
3
8
11
12
2
13
5
1

# RIGHT SIDE - FLEX WALKER

REV. 1/16

| INDEX NUMBER | QTY. | PART NUMBER | DESCRIPTION | UOM |
|---|---|---|---|---|
| **1** | 2 | 158-8402 | SQUEEGEE/BRUSH LIFT MOTOR - 24VDC | EA |
| **2** | 1 | 158-8403 | DUSTER MOTOR ASSEMBLY - 24VDC | EA |
| 3 | 1 | 153-7203 | BUMPER WHEEL | EA |
| 4 | 2 | 154-1220 | PROXIMITY SENSOR | EA |
| 5 | 6 | 153-0001BK | CASTER ASSEMBLY (3 INCH DUAL WHEEL)- BLACK | EA |

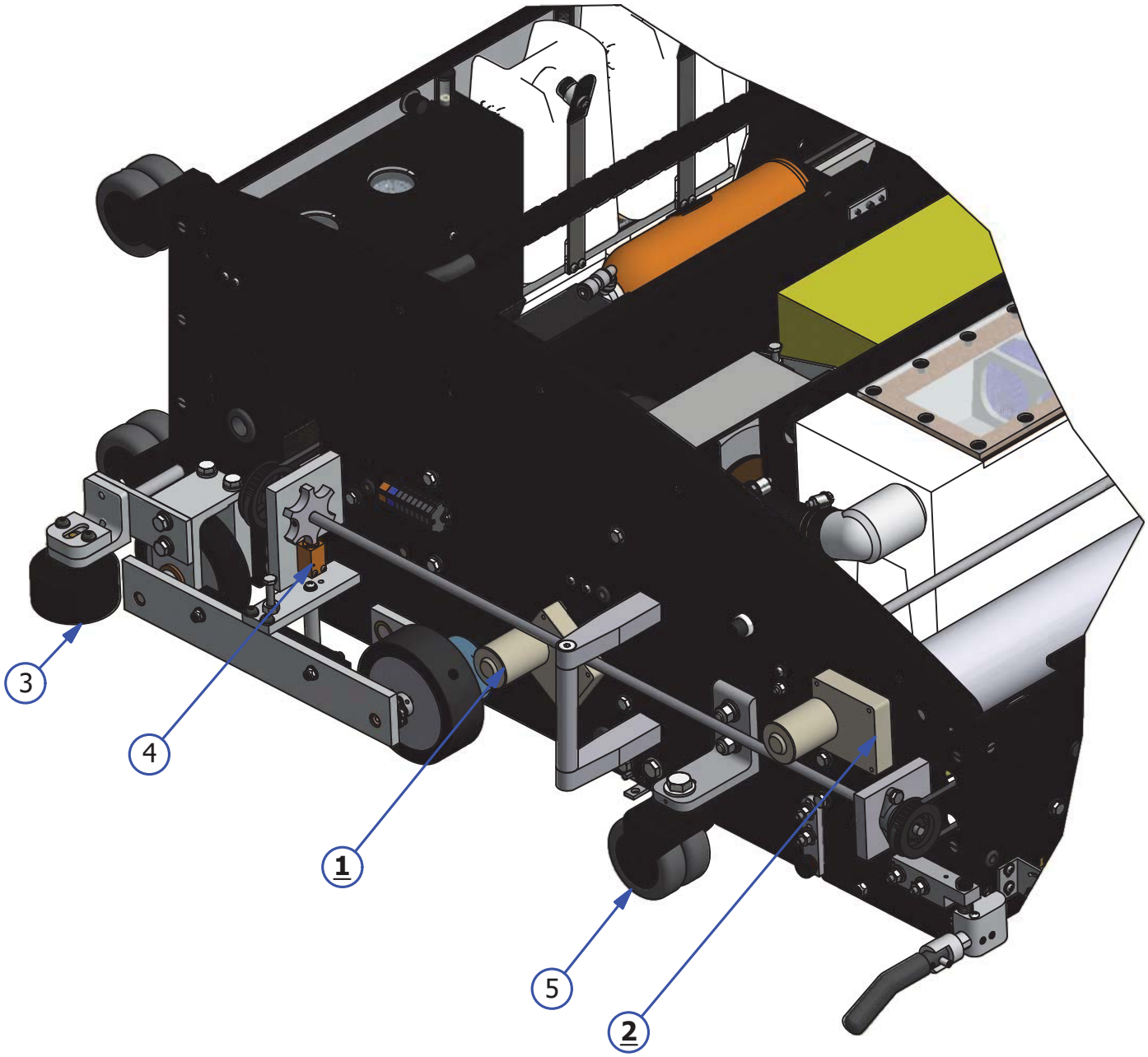
3
4
1
5
2

# LDS ASSEMBLY - FLEX WALKER

REV. 9/17

| INDEX NUMBER | QTY. | PART NUMBER | DESCRIPTION | UOM |
|---|---|---|---|---|
| **1** | 1 | 164-7001 | LDS WHEEL ASSEMBLY | |
| 1.1 | 2 | 153-2201 | SET SCREW - 10-32 X 3/8 | EA |
| | | | | |
| **2** | 1 | | LDS ARM ASSEMBLY | EA |
| 2.1 | 2 | 153-9803 | FLANGED BUSHING (3/8 X 1/2 X 1/4) | EA |
| 2.2 | 2 | 154-9617 | FLANGED BUSHING (3/8 x 1/2 x 3/8) | EA |
| | | | | |
| **3** | 1 | | FLEX LDS DISK | EA |
| 3.1 | 1 | 153-2051 | SET SCREW - 1/4-20 X 1/2 | EA |
| | | | | |
| 4 | 2 | 154-1220 | INDUCTIVE PROXIMITY SENSOR (TL-Q5MC1) | EA |
| 5 | 2 | 153-2216A | MS PHILLIPS - 4-40 X 7/8 | EA |
| 6 | 1 | 164-6128 | LDS ARM MOUNT | EA |
| 7 | 1 | 153-2051 | SET SCREW - 1/4-20 X 1/2 | EA |
| 8 | 1 | 164-6129 | LDS ARM SHAFT | EA |
| 9 | 1 | 153-2944 | TORSION SPRING - RH | EA |
| 10 | 1 | 153-2945 | TORSION SPRING - LH | EA |
| 11 | 1 | 164-6130 | LDS WHEEL SHAFT | EA |
| 12 | 1 | 153-2009 | NYLON FLAT WASHER (3/8 - 0.060) | EA |
| 13 | 2 | 153-2052A | MS PHILLIPS - 1/4-20 X 3/4 TRUSS HEAD | EA |
| 14 | 1 | 153-2121 | OXIDE ALLOY STL SHCS 10-24 X 1/2 | EA |
| 15 | 2 | 153-2013 | LOCK WASHER #10 | EA |
| 16 | 1 | 164-6207 | BRASS THREAD ROD | EA |
| 17 | 2 | 153-2086 | MS PHILLIPS 8-32 X 5/8 | EA |
| 18 | | 153-2013 | LOCK WASHER #10 | EA |
| 19 | 2 | 153-2002 | FLAT WASHER #8 | EA |
| 20 | 1 | 164-6205 | OLS ACTUATOR MOUNT | EA |
| 21 | 1 | 164-6206 | BRASS THRU ROD | EA |
| 22 | 1 | 153-2093 | SPRING - .42 OD X .75 | EA |
| 23 | 1 | 164-2059 | SHCS 10-32 X 1 1/4 | EA |
| 24 | 1 | 164-6204 | OLS ACTUATOR | EA |

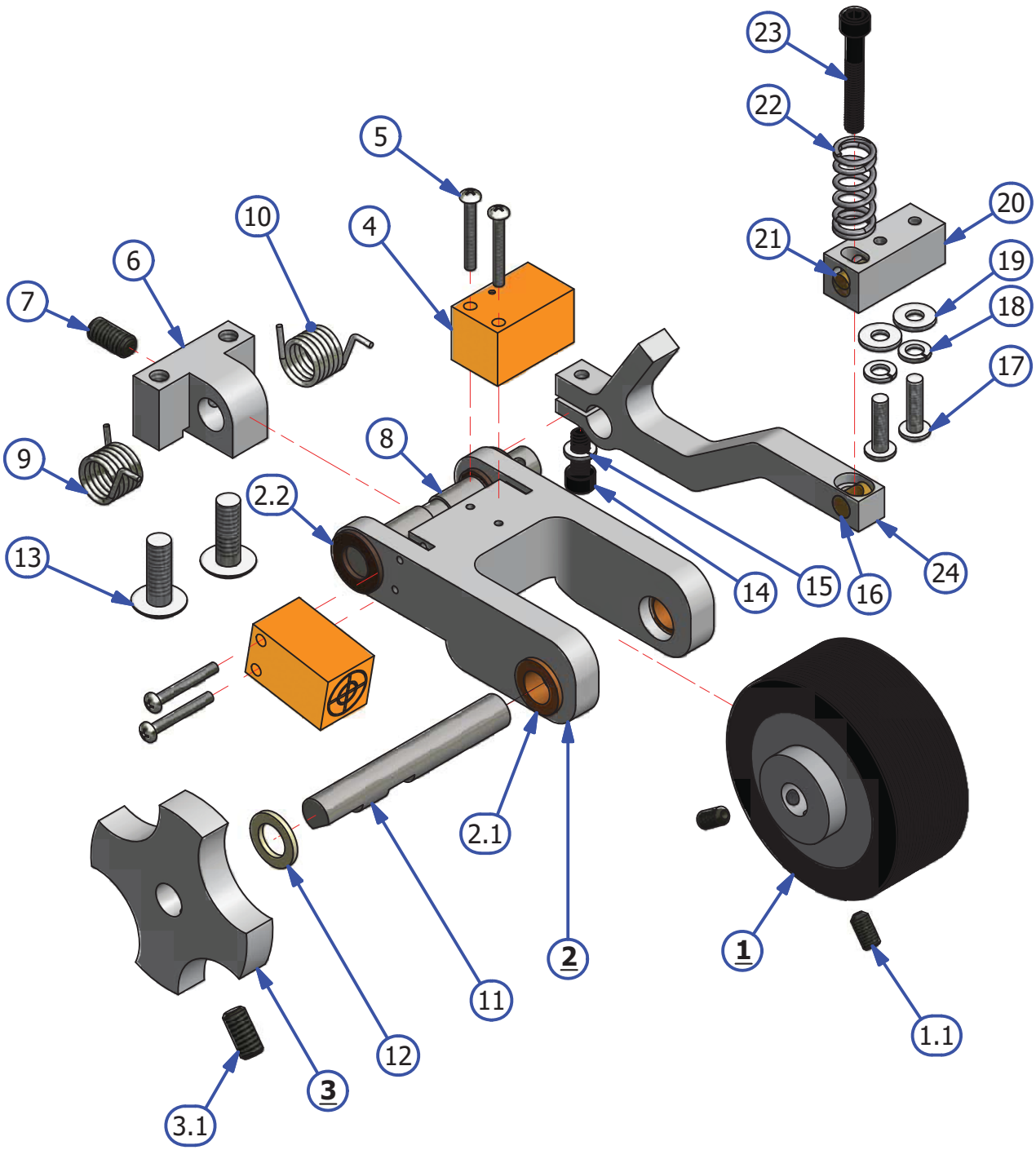
23
22
5
20
10
4
21
19
6
18
7
17
8
9
2.2
13
14
15
16
24
2.1
2
1
11
1.1
12
3
3.1

# FRONT HANDLE ASSEMBLY - FLEX WALKER

REV. 1/16

| INDEX NUMBER | QTY. | PART NUMBER | DESCRIPTION | UOM |
|---|---|---|---|---|
| **1** | 1 | 164-8073 | FRONT HANDLE ASSEMBLY | EA |
| 2 | 1 | 164-6069 | FLEX FRONT HANDLE BLOCK (LT) | EA |
| 3 | 1 | 164-6068 | FLEX FRONT HANDLE BLOCK (RT) | EA |
| 4 | 4 | 153-2996 | SCREW - FHCS 10-24 X 3/4 BLACK OXIDE | EA |
| 5 | 2 | 164-6072 | FRONT HANDLE PLUG | EA |
| 6 | 4 | 164-2009 | SHCS-1/4-20 | EA |
| 7 | 8 | 153-2004 | 1/4 FLATWASHER | EA |
| 8 | 4 | 164-2017 | FHSCS-10-32 X 5/16 | EA |
| 9 | 2 | 164-6071 | BUMPER ARM | EA |
| 10 | 4 | 153-2087 | MS PHILLIPS - 8-32 X 3/4 | EA |
| 11 | 2 | 153-2001 | #6 FLATWASHER | EA |
| 12 | 2 | 153-2231 | LOCKNUT - 4-40 | EA |
| 13 | 2 | 164-6032 | FLEX BUMPER SWITCH BRACKET | EA |
| 14 | 4 | 153-2019 | LOCKNUT - 8-32 (NYLOK) | EA |
| 15 | 8 | 153-2002 | #8 FLATWASHER | EA |
| 16 | 2 | 164-2008 | SHOULDER BOLT 3/8 X 1-1/2 5/16-18 | EA |
| 17 | 2 | 164-6070 | BUMPER BAR BLOCK | EA |
| 18 | 2 | 153-1203 | MICROSWITCH W/ROLLER | EA |
| 19 | 2 | 153-2216A | MS PHILLIPS - 4-40 X 7/8 | EA |
| 20 | 2 | 153-2216 | MS PHILLIPS - 4-40 X 5/8 | EA |
| 21 | 2 | 164-2010 | SPRING-0.300 OD X 1.50 | EA |
| 22 | 4 | 153-2023 | 1/4-20 HEX NUT | EA |
| 23 | 4 | 153-2014 | 1/4 LOCKWASHER | EA |

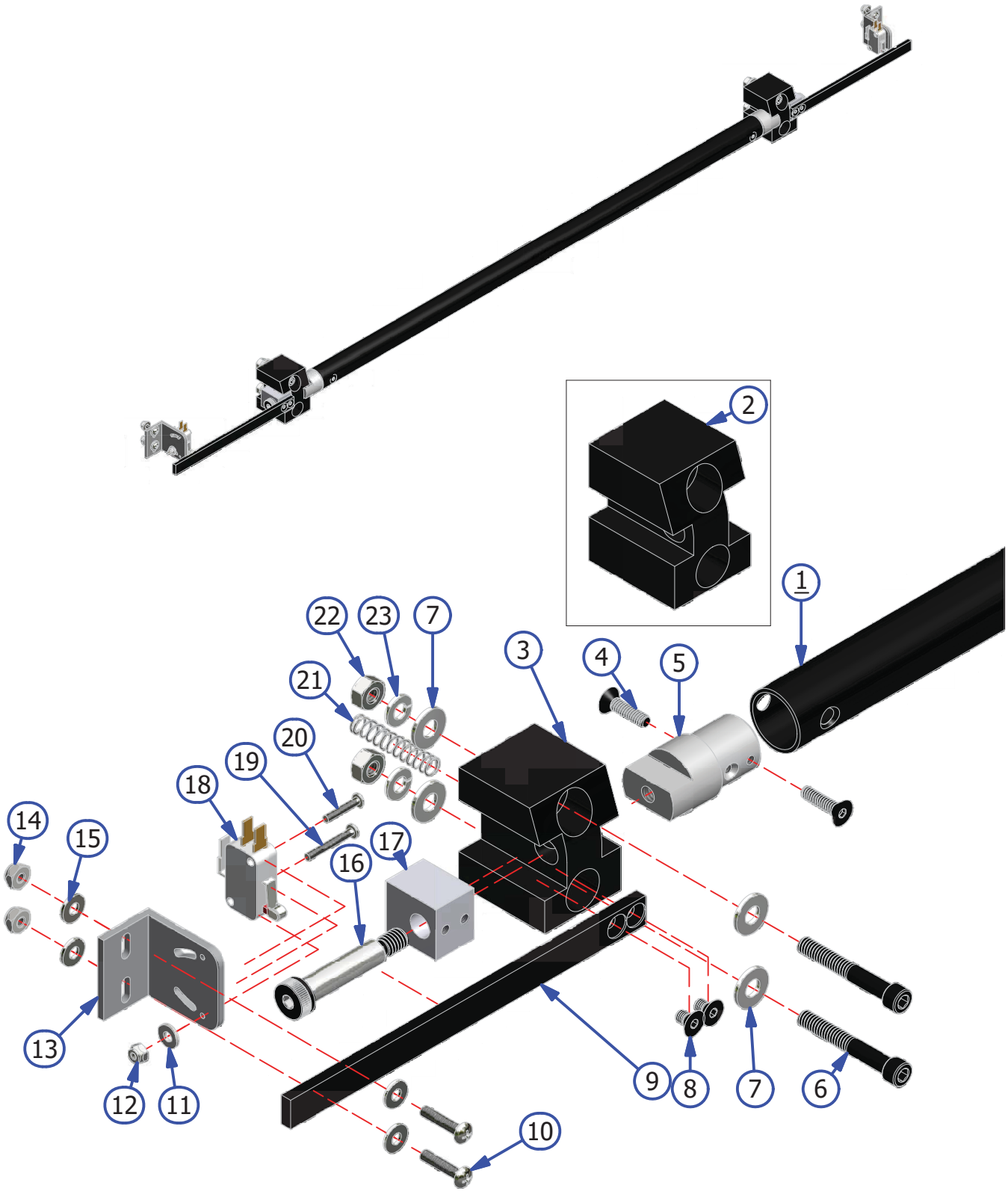
1
2
3
4
5
6
7
8
9
10
11
12
13
14
15
16
17
18
19
20
21
22
23

# WHISKER ASSEMBLY

REV. 9/17

| INDEX NUMBER | QTY. | PART NUMBER | DESCRIPTION | UOM |
|---|---|---|---|---|
| 1 | 1 | 164-8825 | RIGHT WHISHER ASSEMBLY | EA |
| 2 | 4 | 153-2023 | 1/4-20 HEX NUT | EA |
| 3 | 4 | 153-2014 | 1/4 LOCKWASHER | EA |
| 4 | 4 | 153-2004 | 1/4 FLATWASHER | EA |
| 5 | 2 | 158-8611 | WHISKER BEARING BLOCK ASSEMBLY WITH BUSHING | EA |
| 6 | 4 | 153-2227A | FHMS - 1/4-20 X 1-1/2 | EA |
| 7 | 2 | 153-2739 | SHOULDER BOLT 3/8 IN DIA 1" LONG | EA |
| 8 | 2 | 158-6641 | WHISKER SWITCH MOUNT PLATE | EA |
| 9 | 4 | 153-2231 | LOCKNUT - 4-40 | EA |
| 10 | 2 | 153-1203 | MICROSWITCH W/ROLLER | EA |
| 11 | 4 | 153-2216A | MS PHILLIPS - 4-40 X 7/8 | EA |
| 12 | 2 | 154-9212 | BUSHING ONLY | EA |
| 13 | 2 | 153-2817 | FLAT HEAD PHILLIPS - 8-32 X 1/2 | EA |
| 14 | 2 | 153-2414 | HEX NUT - 8-32 | EA |
| 15 | 4 | 153-2051A | SET SCREW - 1/4-20 X 1/4 | EA |
| 16 | 1 | 153-2944 | TORSION SPRING - RIGHT | EA |
| 17 | 4 | 153-2086 | MS PHILLIPS - 8-32 X 5/8 | EA |
| 18 | 1 | 164-6181 | WHISKER SPRING MOUNT BLOCK - LEFT | EA |
| 19 | 1 | 153-2945 | TORSION SPRING - LEFT | EA |
| 20 | 2 | 153-2086A | MS PHILLIPS - 8-32 X 3/8 | EA |
| 21 | 1 | 164-6182 | WHISKER SPRING MOUNT BLOCK - RIGHT | EA |
| 22 | 4 | 153-2002 | FLAT WASHER #8 | EA |
| 23 | 1 | 164-8824 | LEFT WHISKER ASSEMBLY | EA |

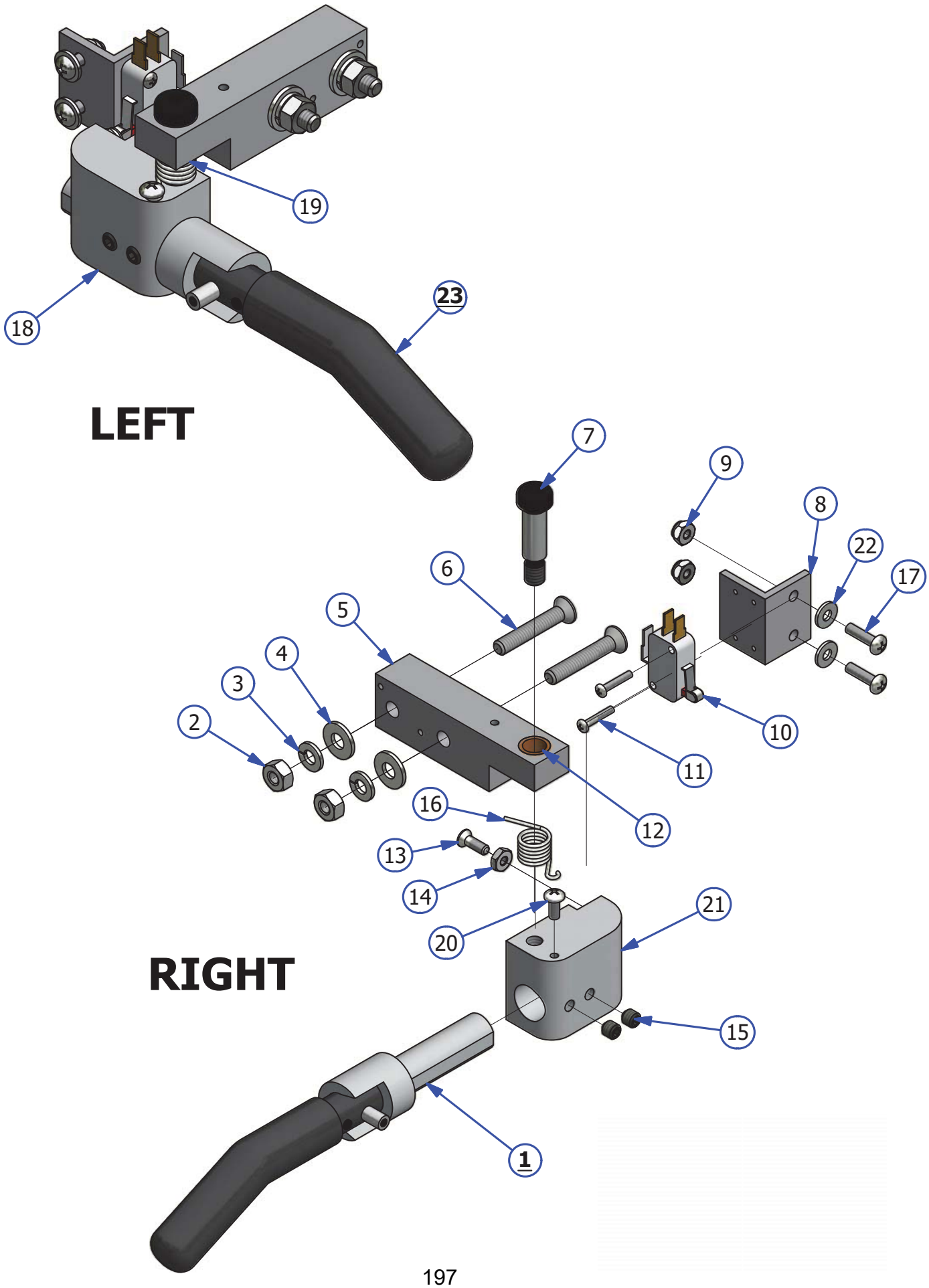
19
18
23
LEFT
7
9
8
22
17
6
5
4
3
2
10
11
12
16
13
14
20
21
RIGHT
15
1

REV. 10/19

# PLC PLATE ASSEMBLY

| INDEX NUMBER | QTY. | PART NUMBER | DESCRIPTION | UOM |
|---|---|---|---|---|
| **1** | 1 | 158-1610P | PLC FOR FLEX - SPECIFY SOFTWARE VERSION | EA |
| 1.1 | 1 | 158-1610S | SERIAL CONVERTER FOR FLEX | EA |
| | 1 | 158-1610D | CABLE TO TOUCHSCREEN - 24IN (NOT SHOWN) | EA |
| **2** | 1 | 164-8203 | TOUCH SCREEN ASSEMBLY | EA |
| 2.1 | 1 | 164-1245 | SCREEN PROTECTOR | EA |
| **3** | 1 | 164-8010 | SPEED CONTROL ASSEMBLY - DRIVE | EA |
| 4 | 7 | 153-2086A | MS PHILLIPS - 8-32 X 3/8 | EA |
| 5 | 1 | 164-6183 | CLEAR PC PLATE COVER | EA |
| **6** | 6 | 158-1458 | RELAY - OMRON 24DC DPDT GENERAL PURPOSE | EA |
| 6.1 | 6 | 164-1204 | RELAY BASE FOR RELAY 158-1458 | EA |
| **7** | 2 | 158-1460 | RELAY SOLID STATE | EA |
| 7.1 | 2 | 164-1206 | RELAY BASE FOR RELAY 154-1460 | EA |
| 8 | 1 | 164-1217 | ANALOG OUTPUT (Buffer and/or Cleaner Upgrade only) | EA |
| 9 | 1 | 164-6184 | TOUCH SCREEN MOUNT 7" | EA |
| 10 | 1 | 164-6161 | E-STOP BOX | EA |
| **11** | 1 | 164-8223 | E-STOP SWITCH ASSEMBLY | EA |
| 11.1 | 1 | 164-1223B | BREAKER FOR ESTOP | EA |
| **12** | 6 | 158-1462 | 24 V RELAY DPDT 10A W/DIODE | EA |
| 12.1 | 6 | 164-1203 | RELAY BASE FOR RELAY 158-1462 | EA |
| 13 | 1 | 153-1408 | PUSH BUTTON (RED = NORMALLY OPEN) | EA |
| 14 | | 153-1209 | BUTTON GUARD | EA |
| 15 | 14 | 153-1028 | PANEL-MOUNT FUSE HOLDER - UL (COMPLETE) | EA |
| 16 | 4 | 158-1610TC | TOUCH SCREEN MOUNT CLIP | EA |
| 17 | 1 | 158-6666 | RESISTANCE ADJUSTMENT BOX - MODIFIED | EA |
| 18 | 2 | 158-1465 | CONTACTOR 24VDC | EA |
| 19 | 1 | 158-1605 | STEPPER SPEED CONTROL BOARD | EA |
| 20 | 1 | 164-8221 | SPEED CONTROL BOARD - CLEANER/WATER | EA |
| 21 | 1 | 158-1611 | MOLEX TERMINAL BLOCK | EA |
| 21.1 | 1 | 158-8619W | RESISTANCE WIRE ASSY - 22AWG | EA |
| 22 | 1 | 164-8225 | SPEED CONTROL ASSEMBLY - BUFFER DRIVE | EA |
| 23 | 1 | 164-8220 | WIFI ADAPTER | EA |
| | 1 | 164-1239 | COMMUNICATION CABLE | EA |

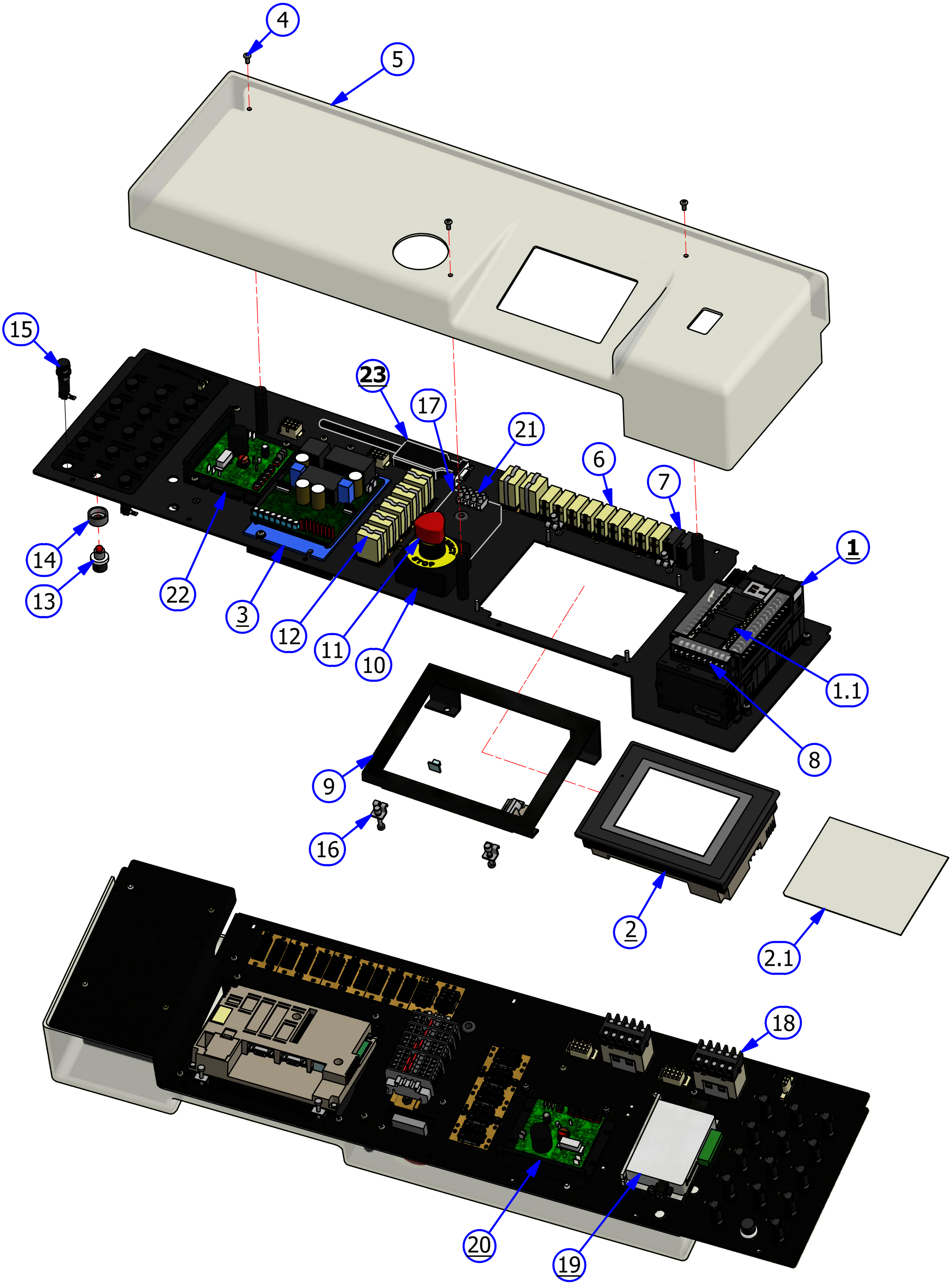
4
5
15
23
17
21
6
7
14
13
22
3
12
11
10
1
1.1
8
9
16
2
2.1
18
20
19

# OIL VALVE ASSEMBLY

REV. 2/16

| INDEX NUMBER | QTY. | PART NUMBER | DESCRIPTION | UOM |
|---|---|---|---|---|
| **1** | 2 | 154-8298 | OIL CONTROL VALVE (24VDC) WITH EXTENEDED WIRES | EA |
| 1.1 | 2 | 154-0613 | ELBOW - 1/8 NPT X 3/16 TUBE | EA |
| 1.2 | 4 | 154-0224 | MALE CONNECTOR - 1/4" TUBE X 1/8 NPT | EA |
| **2** | 1 | 158-8632 | OIL STEPPER MOTOR ASSEMBLY | EA |
| **3** | 2 | 164-8021 | FLEX PULSE SUPRESSION TUBE | EA |
| **4** | 2 | 154-1214 | FLUID METERING PUMP-0.05 ML/STROKE | EA |
| 5 | 1 | 158-9403 | PULLEY - 26XL037 X 5/16" BORE | EA |
| 6 | 8 | 153-2002 | #8 FLATWASHER | EA |
| 7 | 4 | 153-2089 | MS PHILLIPS - 8-32 X 1 | EA |
| 8 | 2 | 164-0207 | PIPE NIPPLE - THREADED BLK - 1/8 X 1 1/2 | EA |
| 9 | 2 | 154-0230 | IN-LINE COUPLER (1/8 NPT) FLOAT | EA |
| 10 | 2 | 158-1613 | PRESSURE GAUGE - 60PSI | EA |
| 11 | 4 | 153-2087 | MS PHILLIPS - 8-32 X 3/4 | EA |
| 12 | 4 | 153-2013 | #10 LOCKWASHER | EA |
| 13 | 2 | 154-9208 | PULLEY - 12XL - 5/16" BORE W/SET SCREW | EA |
| 14 | 1 | 164-8029 | OIL PUMP IDLER ASSEMBLY | EA |
| 15 | 4 | 164-2046 | HOSE CLAMP | EA |
| 16 | 6 | 154-0226 | ELBOW - TUBE TO HOSE BARB (1/4 X 1/4 ID) | EA |
| 17 | 4 | 154-0222 | ELBOW - 1/4" STEM X 1/4" TUBING OD | EA |
| 18 | 4 | 153-2504 | MS PHILLIPS - 4-40 X 3/8 | EA |
| 19 | 2 | 154-0248 | REDUCING UNION CONNECTOR-1/4" X 3/16" | EA |
| 20 | 1 | 154-0202A | PENCIL TUBING STOCK 1/4OD X 1/8ID | IN |
| 21 | 4 | 153-2019 | LOCKNUT - 8-32 (NYLOK) | EA |
| 22 | 1 | 154-0202 | PENCIL TUBING STOCK 3/8OD X 1/4ID | IN |
| 23 | 2 | 153-0815 | UNION TEE (1/4 X 1/4 X 1/4 - QUICK DISC) | EA |
| 24 | 1 | 164-9008 | TIMING BELT DOUBLE SIDED (220XL038 | EA |
| 25 | 1 | 154-0202B | PENCIL TUBING STOCK - 3/16 OD X 1/16 ID | IN |
| 26 | 1 | 153-2510 | NYLON WASHER - 1/4 | EA |
| 27 | 1 | 153-2803 | SHOULDER BOLT - 1/4 X 1-1/4 (10-24) | EA |

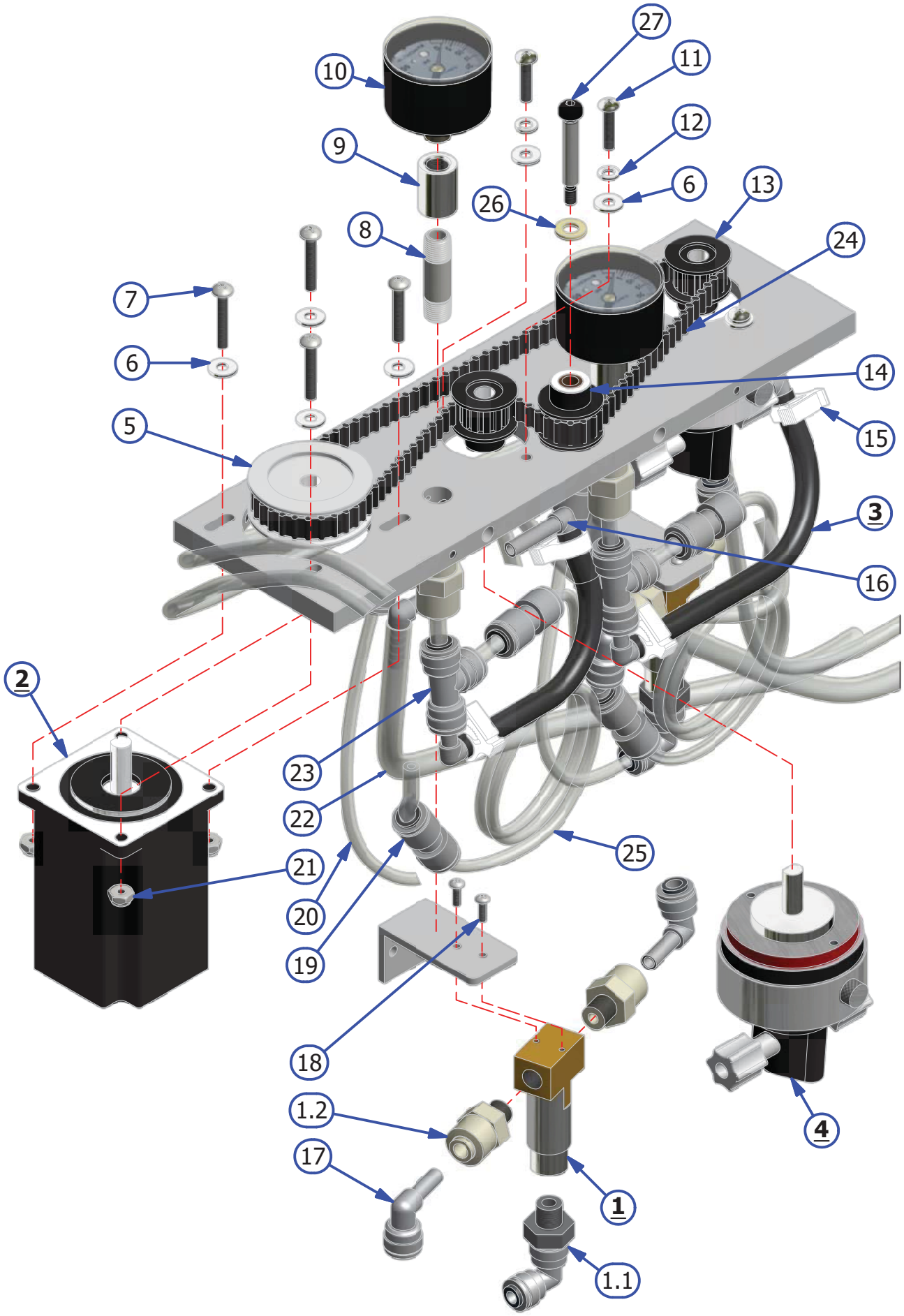
27
11
10
12
9
6
13
26
8
24
7
6
14
5
15
3
16
2
23
22
25
21
20
19
18
1.2
17
1
1.1
4

| INDEX NUMBER | QTY. | PART NUMBER | DESCRIPTION | UOM |
|---|---|---|---|---|
| 1 | 2 | 164-8015 | FLEX 1.5L CARTRIDGE REPLACEMENT KIT **COMPLETE** | EA |
| | 1 | 164-8015A | CARTRIDGE A/B ONLY - **NO PLUNGER** | EA |
| | | | | |
| 2 | 2 | 164-8007 | OIL SUPPLY TANK VENT VALVE ASSEMBLY | EA |
| | | | | |
| | | | | |
| 3 | 2 | 164-6260 | CYLINDER SUB TANK **(BLACK)** | EA |
| | | | | |
| 4 | 2 | 164-8237 | FLOAT ASSEMBLY | EA |
| | | | | |
| 5 | 1 | 164-6124 | OIL PLATE ASSEMBLY | EA |
| 6 | 2 | 153-2019 | LOCKNUT - **8-32 (NYLOK)** | EA |
| 7 | 2 | 164-2016 | THUMB SCREW - KNURLED HEAD | EA |
| 8 | 2 | 153-2817 | FLAT HEAD PHILLIPS - **8-32 X 1/2** | EA |
| 9 | 1 | 164-6122 | OIL PLATE MOUNT | EA |
| 10 | 1 | 162-2013 | FENDER WASHER **1/4 X 7/8** | EA |
| 11 | 1 | 153-2014 | LOCK WASHER **1/4** | EA |
| 12 | 4 | 164-6079 | VITON O-RING | EA |
| 13 | 2 | 164-8015P | PLUNGER ASSEMBLY | EA |
| 14 | 2 | 164-0004 | CARTRIDGE CAP | EA |
| 15 | 6 | 153-2605 | MS PHILLIPS - **10-32 X 1/2 (SELF-TAP)** | EA |
| 16 | 6 | 153-2013 | **#10** LOCKWASHER | EA |
| 17 | 6 | 153-2003 | **#10** FLATWASHER | EA |
| 18 | 1 | 164-6263 | CYLINDER SUB TANK MOUNT BRACKET | EA |
| 19 | 2 | 164-0215 | IN-LINE STRAINER - **1/4** HOSE BARB | EA |
| 20 | 2 | 164-6261 | CYLINDER SUB TANK MOUNT PLATE | EA |
| 21 | 2 | 154-0858 | MALE CONNECTOR **1/4 TUBE - 1/4 NPTF** | EA |
| 22 | 2 | 154-0814 | FIITING - **1/4 NPT X 3/8 TUBE** | EA |
| 23 | 4 | 164-8205 | CYLINDER SUB TANK COVER ASSY. **W/FELT** | EA |
| 24 | 6 | 153-2086 | MS PHILLIPS - **8-32 X 5/8** | EA |
| 25 | 4 | 153-2533 | INTERNAL TOOTH LOCK WASHER - **#8** | EA |
| 26 | 2 | 164-6169 | SPRING STEEL | EA |
| 27 | 1 | 153-2086A | MS PHILLIPS - **8-32 X 3/8** | EA |
| 28 | 2 | 153-2035 | BLIND RIVET WASHER - **3/16** | EA |
| 29 | 2 | 164-2053 | RECTANGLE CAP **1/16 X 3/4** | EA |
| 30 | 2 | 164-6167 | RUBBER BUMPER STANDOFF | EA |
| 31 | 2 | 164-2052 | RUBBER BUMPER **23/32** DIA. | EA |
| 32 | 2 | 153-2541 | MS PHILLIPS - **8-32 X 1/2** | EA |

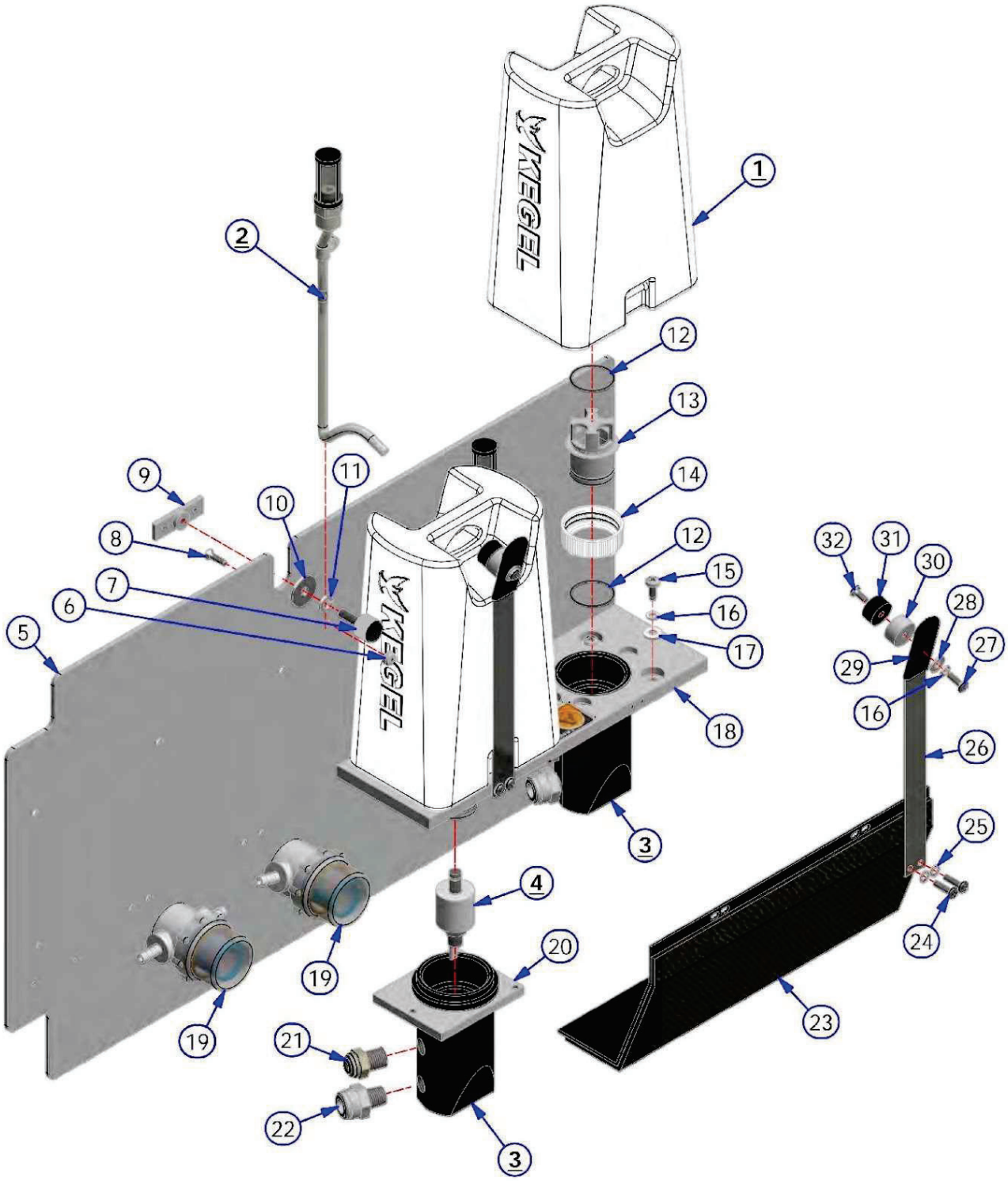
1
2
3
4
5
6
7
8
9
10
11
12
13
14
15
16
17
18
19
19
20
21
22
3
23
24
25
26
27
28
29
16
30
31
32

# OIL HEAD ASSEMBLY

REV. 12/18

| INDEX NUMBER | QTY. | PART NUMBER | DESCRIPTION | UOM |
|---|---|---|---|---|
| **1** | 1 | 164-8051 | DUAL OIL TIP WITH FITTINGS | EA |
| 2 | 1 | 164-6046 | FLEX HEAD BAR SUPPORT | EA |
| 3 | 1 | 164-6104 | OIL TIP HOSE ANGLE | EA |
| 4 | 5 | 153-2806 | FLAT HEAD PHILLIPS - 8-32 X 5/8 | EA |
| 5 | 4 | 153-2231 | LOCKNUT - 4-40 | EA |
| 6 | 4 | 153-2724 | FHMS PHILLIPS - 4-40 X 1/2 | EA |
| 7 | 1 | 164-8023 | OIL TUBE SLEEVE | EA |
| 8 | 1 | 154-9201 | BELT FOR HEAD DRIVE | EA |
| 9 | 1 | 153-2937 | SHAFT COLLAR 3/4" ID | EA |
| 10 | 1 | 153-2972 | THREADED PIN 1/4-20 FOR TIP AND HOSE ASSY | EA |
| 11 | 1 | 164-6156 | OIL TIP TUBE | EA |
| 12 | 1 | 164-6102 | LEFT HEAD BAR MOUNT | EA |
| 13 | 2 | 153-2987 | SCREW 6-32 X 3/8 SHCS | EA |
| 14 | 1 | 164-6111 | FLEX OIL HEAD ASSY | EA |
| 15 | 3 | 153-2702 | FHMS - 1/4-20 X 1 SELF-LOCKING | EA |
| 16 | 1 | 154-6647A | SLIDING HEAD BAR (3/8) - STANDARD | EA |
| 17 | 1 | 164-2016 | THUMB SCREW - KNURLED HEAD | EA |
| 18 | 2 | 154-1220 | PROXIMITY SENSOR | EA |
| 19 | 1 | 164-6103 | RIGHT HEAD BAR MOUNT | EA |
| 20 | 4 | 153-2216A | MS PHILLIPS - 4-40 X 7/8 | EA |
| 21 | 1 | 164-9009 | FLEX-CABLE CARRIER | EA |

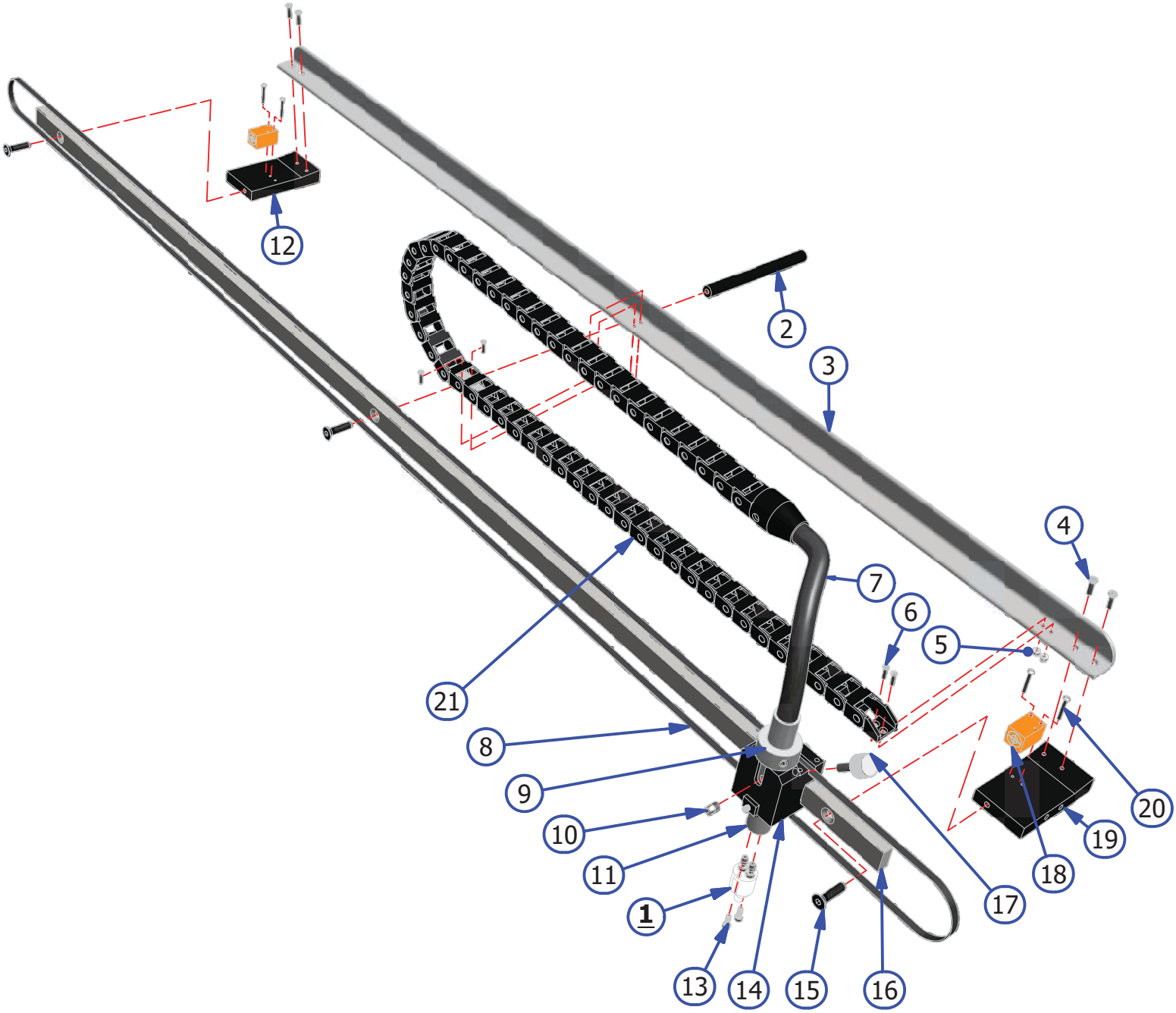
12
2
3
4
7
6
5
21
8
9
10
11
1
13
14
15
16
17
18
19
20

# OIL TRANSFER ASSEMBLY

REV. 10/18

| INDEX NUMBER | QTY. | PART NUMBER | DESCRIPTION | UOM |
|---|---|---|---|---|
| **1** | 1 | 164-8001A | BUFFER BRUSH ASSEMBLY | EA |
| **2** | 1 | 164-0866 | SINGLE LONG BRUSH ASSEMBLY (TRANSFER BRUSH) | EA |
| **3** | 1 | 164-8019 | FLEX RIGHT DRIP PAD ASSEMBLY | EA |
| | 1 | 154-0228S | FELT MATERIAL | EA |
| **4** | 1 | 164-8018 | FLEX LEFT DRIP PAD ASSEMBLY | EA |
| | 1 | 154-0228S | FELT MATERIAL | EA |
| **5** | 1 | 164-8045 | BEARING MOUNT ASSEMBLY - RIGHT | EA |
| 5.1 | 1 | 153-2309 | BEARING ASSEMBLY 3/8 SHAFT | EA |
| **6** | 1 | 164-8046 | BEARING MOUNT ASSEMBLY - LEFT | EA |
| 6.1 | 1 | 153-2309 | BEARING ASSEMBLY 3/8 SHAFT | EA |
| 7 | 4 | 153-2306 | CUP POINT SQ HEAD SET SCREW 1/4-20 X 1 | EA |
| 8 | 4 | 153-2304 | JAM NUT - 1/4-20 | EA |
| 9 | 1 | 158-6735 | BRUSH TRACK MOUNT SUPPORT | EA |
| 10 | 5 | 153-2004 | 1/4 FLATWASHER | EA |
| 11 | 5 | 153-2014 | 1/4 LOCKWASHER | EA |
| 12 | 1 | 158-9008 | PULLEY 24XL037 3/8 BORE | EA |
| 13 | 5 | 153-2054 | HHCS - 1/4-20 X 1-1/4 | EA |
| 14 | 1 | 158-6732 | SINGLE BRUSH TRACK MOUNT | EA |
| 15 | 1 | 154-9203 | BELT FOR TRANSFER ROLLER | EA |
| 16 | 4 | 153-2831 | SCREW - 6/32 X 3/8 FHCS | EA |
| 17 | 4 | 153-2081 | MS PHILLIPS - 6-32X 1/2" | EA |
| 18 | 4 | 153-2968 | SCREW - 1/4-20 X 3/4 FHSHCS | EA |
| 19 | 2 | 153-2802 | FHSS - 5/16-18 X 5/8 | EA |
| 20 | 1 | 153-2513 | FHSS - 5/16-18 X 1-1/2 | EA |
| 21 | 1 | 154-8640 | FLANGED BEARING-STD BRUSH (3/4" ROTATED) | EA |
| 22 | 2 | 153-2015 | 5/16 LOCKWASHER | EA |
| 23 | 1 | 164-6051 | TRANSFER ROLLER IDLER BELT BLOCK | EA |
| 24 | 2 | 153-2022 | HEX NUT - 10-24 | EA |
| 25 | 1 | 153-2024 | HEX NUT - 5/16-18 | EA |
| 26 | 6 | 153-2955 | 10-24 X 7/8 HEX HEAD MACHINE SCREW | EA |
| 27 | 1 | 158-6742 | TRANSFER ROLLER BELT IDLER ROLLER | EA |
| 28 | 1 | 153-2308 | HEXAGON SOCKET HEAD SHOULDER SCREW | EA |
| 29 | 2 | 164-6052 | TRANSFER ROLLER ADJUSTMENT PLATE | EA |
| 30 | 2 | 153-2035 | BLIND RIVET WASHER - 3/16 | EA |
| 31 | 4 | 153-2013 | #10 LOCKWASHER | EA |
| 32 | 4 | 153-2999 | SCREW - SHCS 8-32 X 1/2 BLACK OXIDE | EA |
| 33 | 1 | 164-9007 | PULLEY 24XLO37 3/4 BORE NO HUB NO KWY | EA |
| 34 | 1 | 158-9402 | PULLEY FOR BUFFER BRUSH ASSEMBLY | EA |
| 35 | 1 | 164-8008 | TRANSFER ROLLER ASSEMBLY | EA |
| 36 | 1 | 158-9601 | FLANGED BUSHING | EA |
| 37 | 1 | 153-9816 | FLANGED BUFFER BRUSH BEARING ASSEMBLY | EA |
| 38 | 2 | 153-2801 | SHOULDER BOLT - 3/8 X 3/8 (5/16-18) | EA |
| 39 | 2 | 153-2801A | SHOULDER BOLT CUT - 3/8 X 3/8 (5/16-18) | EA |
| 40 | 1 | 164-6013 | LEFT BEARING MOUNT | EA |
| 41 | 1 | 164-6014 | RIGHT BEARING MOUNT | EA |
| 42 | 1 | 162-2032 | LOCKNUT CENTERLOCK 5/16-18 | EA |
| 43 | 1 | 164-6166 | CONCENTRIC IDLER SLEEVE | EA |
| 44 | 1 | 164-6165 | BELT SLACK CONTROL IDLER | EA |
| 45 | 1 | 164-2079 | HHCS 5/16 X 2 1/4 | EA |

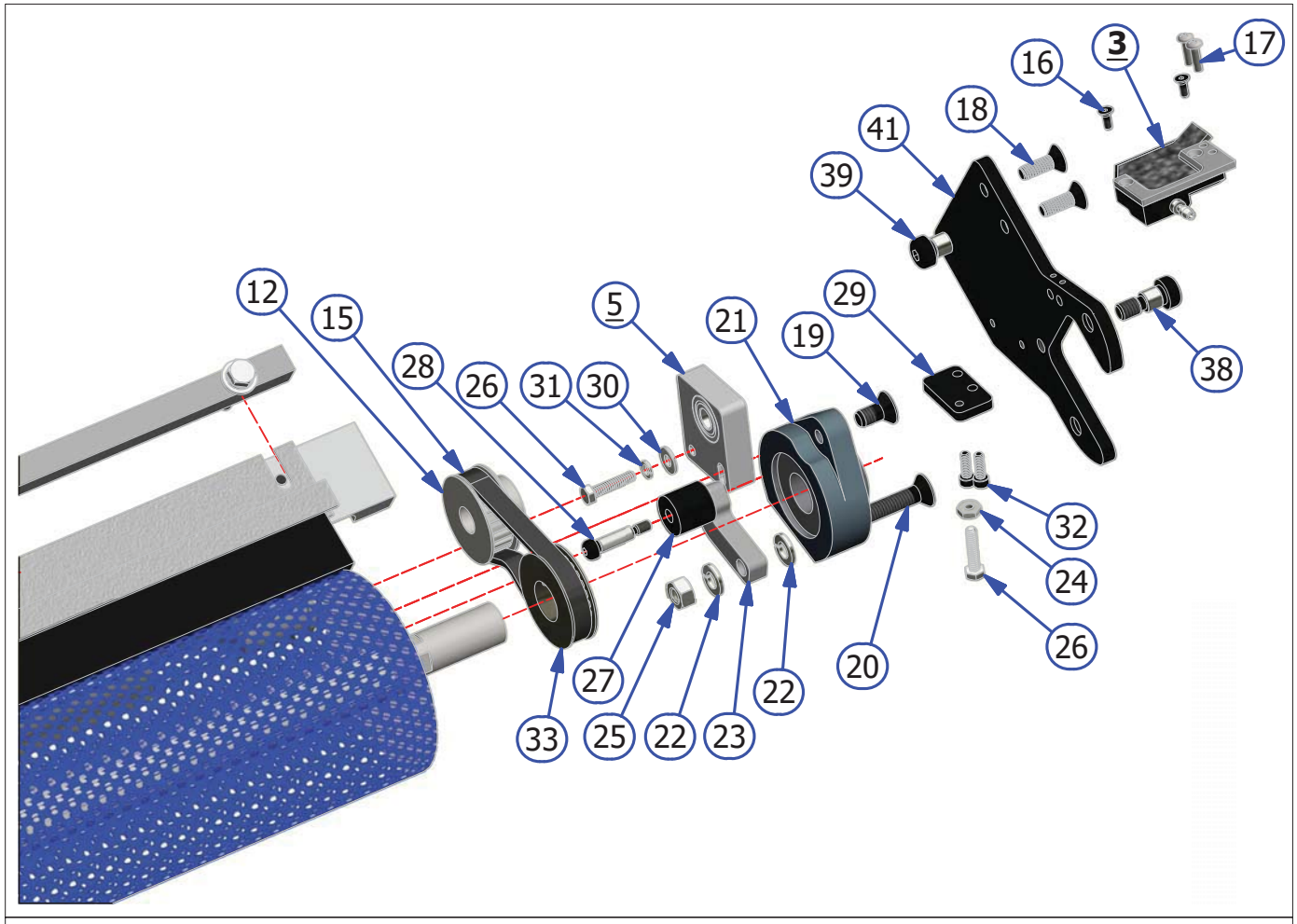
12
15
28
26
31
30
5
21
19
29
3
17
16
18
41
39
38
32
24
26
20
22
27
25
22
23
33

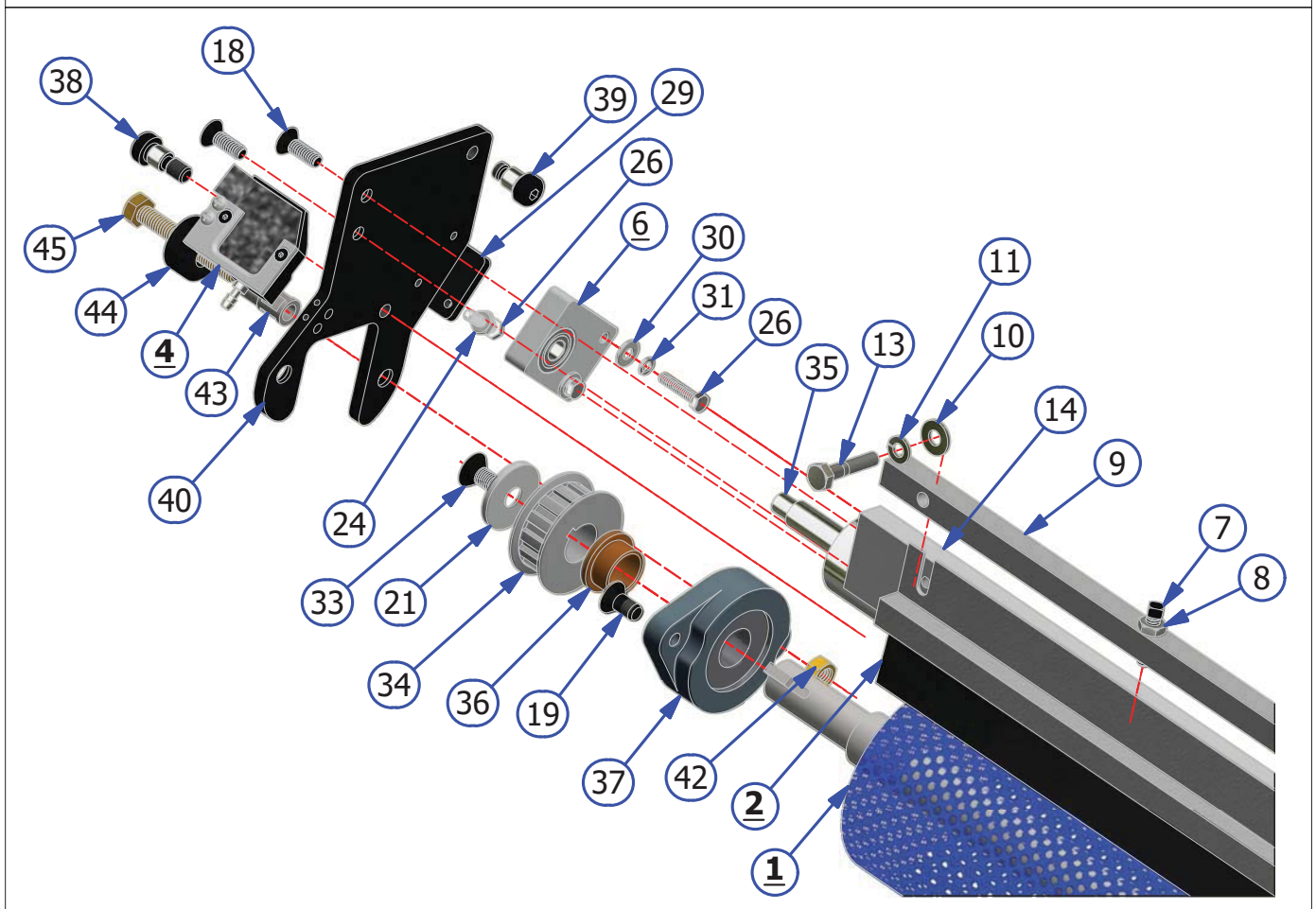
38
18
39
29
26
6
30
31
26
11
10
13
35
14
9
7
8
45
44
4
43
40
24
33
21
34
36
19
37
42
2
1

# BRUSH LIFT ROD ASSEMBLY

| INDEX NUMBER | QTY. | PART NUMBER | DESCRIPTION | UOM |
|---|---|---|---|---|
| **1** | 1 | 158-8402 | MOTOR ASSEMBLY - 24VDC | EA |
| **2** | 1 | 158-8634 | SQUEEGEE/BRUSH MOUNT PLATE ASSEMBLY | EA |
| | 1 | 158-9614 | BALL BEARING MINITURE | EA |
| **3** | 1 | 164-8218 | FLEX BRUSH LIFT ROD - 2016 | EA |
| 4 | 2 | 164-8084 | FLEX BRUSH LIFT ROD TO BEARING LINK | EA |
| 5 | 3 | 153-2027A | JAM NUT - 5/16-18 | EA |
| 6 | 5 | 153-2801 | SHOULDER BOLT-3/8 X 3/8 (5/16-18) | EA |
| 7 | 6 | 153-9803 | FLANGED BUSHING (3/8 X 1/2 X 1/4) | EA |
| 8 | 3 | 153-2003 | #10 FLATWASHER | EA |
| 9 | 3 | 153-2013 | #10 LOCKWASHER | EA |
| 10 | 2 | 153-2092 | MS PHILLIPS - 10-32 X 1 | EA |
| 11 | 1 | 154-6243 | MOTOR CAM-DUAL LOBES (STACKED SWITCHES) | EA |
| 12 | 1 | 153-2515 | SHOULDER BOLT - 3/8 X 1/2 (5/16-18) | EA |
| 13 | 1 | 154-8837 | FLEX BRUSH LIFT ROD TO CAM LINK | EA |
| 14 | 2 | 153-2231 | LOCKNUT - 4-40 | EA |
| 15 | 2 | 153-1203 | MICROSWITCH W/ROLLER | EA |
| 16 | 2 | 153-2019 | LOCKNUT - 8-32 (NYLOK) | EA |
| 17 | 4 | 153-2002 | #8 FLATWASHER | EA |
| 18 | 1 | 154-6824 | CAM SWITCH PLATE | EA |
| 19 | 2 | 153-2086 | MS PHILLIPS - 8-32 X 5/8 | EA |
| 20 | 2 | 153-2727 | 4-40 X 1-1/4 FHMS | EA |
| 21 | | 153-2817 | FLAT HEAD PHILLIPS - 8-32 X 1/2 | EA |
| 22 | 1 | 153-2091 | MS PHILLIPS - 10-32 X 3/4 | EA |
| 23 | 2 | 153-2804 | COLLAR - 3/8 X 3/4 X 3/8 | EA |

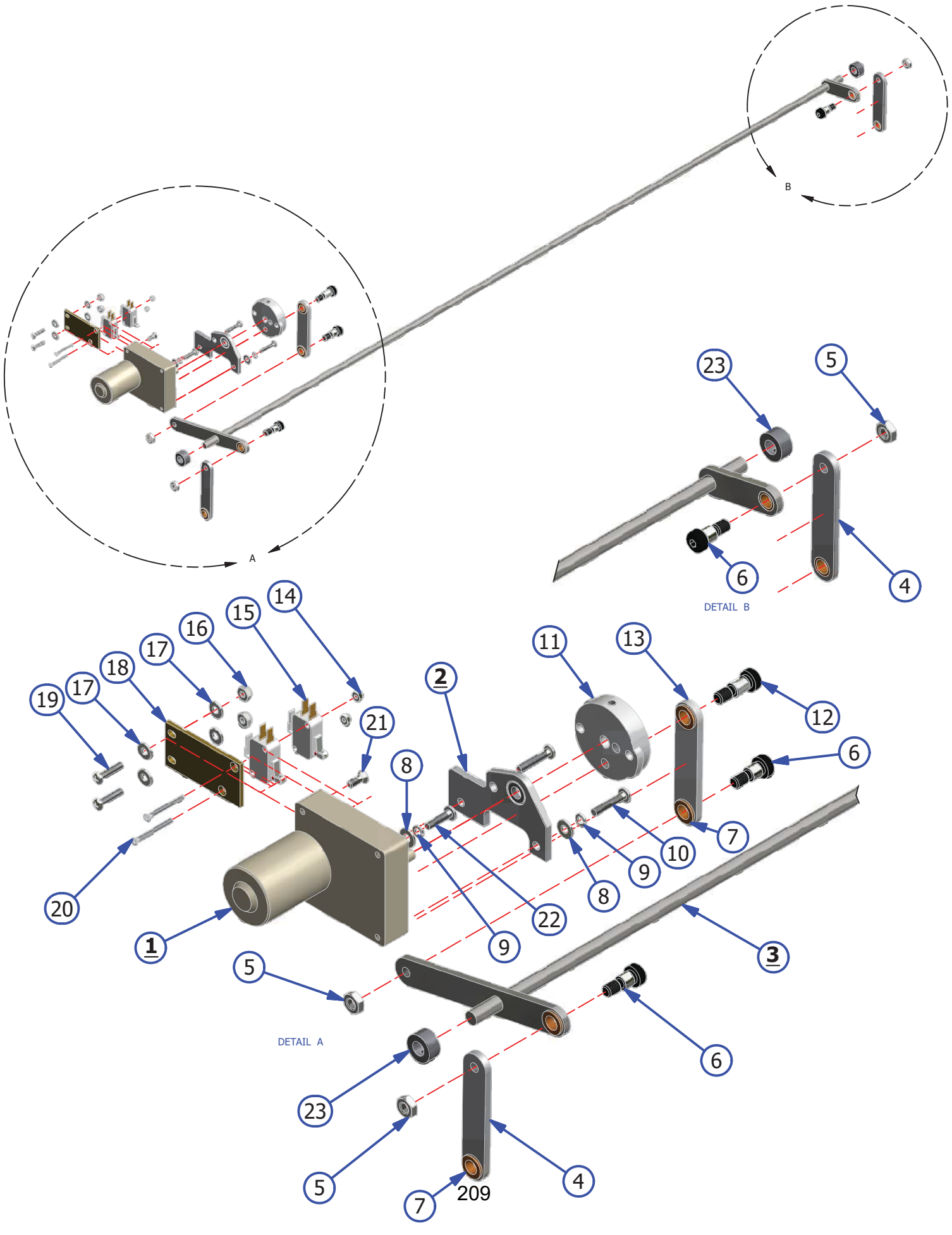
A
B
DETAIL B
DETAIL A
209

# VACUUM MOTOR ASSEMBLY

REV. 1/16

| INDEX NUMBER | QTY. | PART NUMBER | DESCRIPTION | UOM |
|---|---|---|---|---|
| **1** | **1** | **158-8407** | **VACUUM MOTOR ASSEMBLY (COMPLETE)** | |
| 1.1 | 1 | 158-1421B | VACUUM MOTOR BRUSHES | PR |
| 1.2 | 1 | 153-0204F | FAN BLADE | EA |
| 1.3 | 1 | 153-0204H | FAN BLADE COVER | EA |
| 1.4* | 1 | 153-6221M | VACUUM WALL PLASTIC ADAPTER (See Below) | EA |
| **2** | **1** | **158-8618** | **VACUUM MOTOR HOUSING** | |
| 2.1 | | 154-0228S | STOCK - 1/8 IN GRAY FELT | IN |
| 3 | 4 | 153-2830 | HEX HEAD SELF TAP #10 X 5/8 SCREW | EA |
| 4 | 2 | 153-2078 | FHMS - 1/4 - 20 X 3/4 | EA |
| 5 | 2 | 153-2004 | 1/4 FLAT WASHER | EA |
| 6 | 2 | 153-2014 | 1/4 LOCK WASHER | EA |
| 7 | 2 | 153-2023 | 1/4/-20 HEX NUT | EA |

***TECHNICAL NOTE***

WHEN ATTACHING PART NUMBER 153-6221M, USE A TWO (2) PART EPOXY AND ALLOW TO DRY ACCORDING TO DIRECTIONS.

BE CAREFUL NOT TO CRUSH THE VACUUM MOTOR HOUSING INTO INTERNAL BLADES.

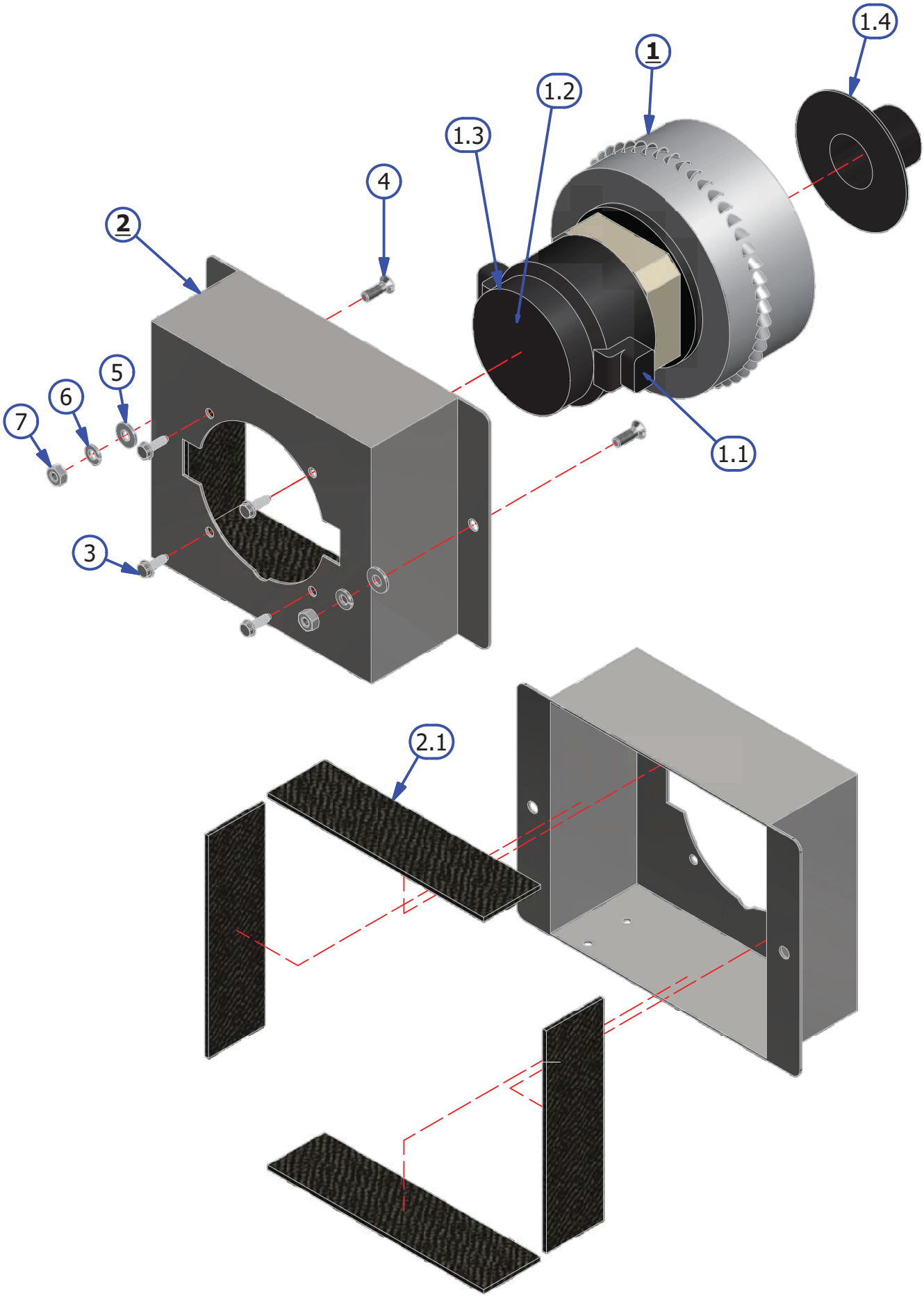
1.4
1
1.2
1.3
4
2
5
6
7
1.1
3
2.1

# CLEANER TANK ASSEMBLY

REV. 9/14

| INDEX NUMBER | QTY. | PART NUMBER | DESCRIPTION | UOM |
|---|---|---|---|---|
| **1** | 1 | 164-8042 | CLEANER SUPPLY TANK (COMPLETE) | EA |
| 1.1 | 1 | 164-6016 | CLEANER SUPPLY TANK ONLY | EA |
| **2** | 1* | 154-8693 | CLEANER SUPPLY TANK FLOAT ASSEMBLY | EA |
| **3** | 1 | 164-8041 | FLEX UPGRADED WATER TANK ASSEMBLY (COMPLETE) | EA |
| 3.1 | 1 | 164-6740 | UPGRADED WATER TANK (TANK ONLY) | EA |
| **4** | 1 | 164-8043 | FLEX UPGRADED CLEANER TANK ASSEMBLY (COMPLETE) | EA |
| 4.1 | 1 | 164-6741 | UPGRADED CLEANER TANK (TANK ONLY) | EA |
| **5** | 1* | 164-8081 | SUPPLY TANK CAP WITH GASKET | EA |
| 5.1 | 1* | 164-0021 | GASKET FOR SUPPLY TANK CAP | EA |
| 6 | 1 | 154-0223 | ELBOW (90 DEGREE) 1/4NPT X 1/4IN TUBING | EA |
| 7 | 1 | 154-8817 | VENT VALVE ASSEMBLY | EA |
| 8 | 2 | 153-2924 | MS PHILLLIPS - 1/4-20 X 3/4 | EA |
| 9 | 1* | 154-0212B | FILTER ASSEMBLY FOR SUPPLY TANK | EA |
| 10 | 2 | 153-2086 | MS PHILLLIPS - 8/32 X 5/8 | EA |
| 11 | 2 | 153-2002 | FLAT WASHER #8 | EA |
| 12 | 1 | 154-6827M | MOUNTING ANGLE - MOLDED PLASTIC | EA |
| 13 | 2 | 153-2231 | LOCKNUT - 4-40 | EA |
| 14 | 1 | 164-8078 | SPLASH GUARD (SPECIFY COLOR) | EA |
| 15 | 2 | 153-2004 | FLAT WASHER 1/4 | EA |
| 16 | | 153-2014 | LOCK WASHER 1/4 | EA |
| 17 | 2 | 153-2726 | 1/4-20 X 1/2 HHCS | EA |
| 18 | 2 | 153-2019 | LOCKNUT - 8-32 (NYLOK) | EA |
| 19 | 2 | 153-2001 | FLAT WASHER #6 | EA |
| 20 | 1 | 154-0609 | MAGNETIC CATCH / PLATE ASSEMBLY | EA |
| 21 | 2 | 153-2216 | MS PHILLIPS 4-40 X 5/8 | EA |
| 22 | 1 | 164-8212 | FELT KIT - 24" X 1/8 48" X 9" X 1/8" | IN |

***TECHNICAL NOTE***

*FOR MACHINES WITH THE UPGRADED CLEANING SYSTEM, THESE PARTS ARE QUANTITY OF TWO.

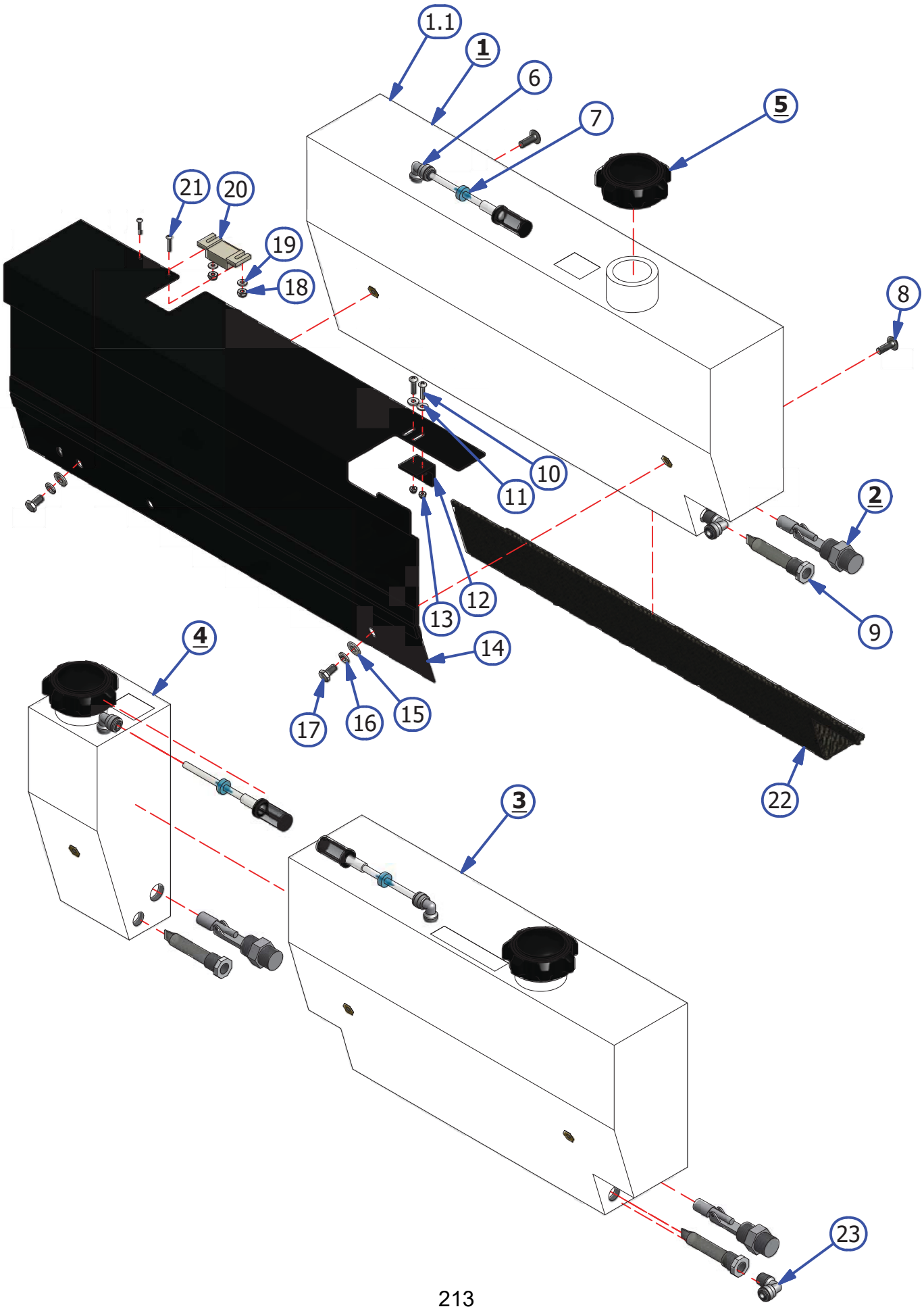
1.1
1
6
7
5
21
20
19
18
8
10
11
2
12
13
9
4
14
17
16
15
22
3
23

# CLEANER HEAD ASSEMBLY

REV. 4/19

| INDEX NUMBER | QTY. | PART NUMBER | DESCRIPTION | UOM |
|---|---|---|---|---|
| **1** | 1 | 154-8852 | CLEANER HOSE AND TIP ASSEMBLY (COMPLETE) | EA |
| 1.1 | 1 | 164-0012M | CLEANER TIP WITH CHECK VALVE | EA |
| 1.2 | 1 | 154-0863 | FITTING - MALE LUER TO 1/8 IN HOSE BARB | EA |
| 1.3 | 1 | 153-2713 | SPRING - TIP RETAINER | EA |
| 1.4 | 1 | 153-2804 | COLLAR - 3/8 X 3/4 X 3/8 | EA |
| 1.5 | 1 | 153-2902 | COLLAR - 1/2 X 1 1/8 X 1/2 | EA |
| **2*** | 1 | 164-8228 | PINDECK TREATMENT TIP ASSEMBLY | EA |
| 2.1* | 1 | 164-2067 | PINDECK TREATMENT TIP COVER | EA |
| 3 | 1 | 154-9201 | HEAD DRIVE BELT ASSEMBLY | EA |
| 4* | 1 | 164-6230 | CLEANER HEAD BELT MOUNT | EA |
| 5 | 4 | 153-2081 | MS PHILLIPS - 6-32 X 1/2 | EA |
| 6* | 1 | 153-2504 | MS PHILLIPS - 4-40 X 3/8 | EA |
| 7 | 1 | 153-2004 | FLAT WASHER | EA |
| 8 | 1 | 153-2014 | LOCKWASHER - 1/4 | EA |
| 9 | 1 | 153-2053 | HHCS - 1/4 X 1" | EA |
| 10 | 1 | 154-6877 | CLEANER HEAD GUIDE BAR | EA |
| 11 | 1 | 154-9205B | PULLEY (28XL 3/8 BORE) | EA |
| 12 | 1 | 153-2603 | HHCS 1/4-20 X 3/4 | EA |
| 13 | 1 | 153-2006 | FLAT WASHER 3/8 | EA |
| 14 | 2 | 154-9804 | FLANGED BEARING FOR CLEANER DRIVE SHAFT | EA |
| 15 | 1 | 154-6878 | CLEANER HEAD DRIVE SHAFT BLOCK | EA |
| 16 | 4 | 153-2091 | MS PHILLIPS - 10-32 X 3/4 | EA |
| 17 | 4 | 153-2013 | LOCK WASHER #10 | EA |
| 18 | 4 | 153-2003 | FLAT WASHER #10 | EA |
| 19 | 2 | 153-2051A | SET SCREW - 1/4-20 X 1/4 | IN |
| 20 | 1 | 164-6090 | CLEANER HOSE SHAFT MOUNT | EA |
| 21 | 2 | 153-2092 | MS PHILLIPS - 10-32 X 1 | EA |
| 22 | 1 | 164-6047 | FLEX CLEANER HEAD DRIVE SHAFT | EA |
| 23 | 1 | 154-6884 | 6 TOOTH SENSOR DISK | EA |
| 24 | 2 | 164-6064 | CLEANER HEAD IDLER MOUNT BLOCK | EA |
| 25 | 2 | 153-2516 | MS PHILLIPS - 4-40 X 1-1/2 | EA |
| 26 | 1 | 154-1220 | PROXIMITY SENSOR | EA |
| 27 | 2 | 153-2001 | FLAT WASHER #6 | EA |
| 28 | 2 | 153-2231 | LOCKNUT - 4-40 | EA |
| 29 | 1 | 154-9805 | PULLEY - 32XL037 - 3/8 BORE DF DBL SET | EA |
| 30 | 1 | 154-6889 | CLEANER HOSE ROUTING BAR | EA |
| 31* | 2 | 164-6231 | HOSE SPRING MOUNT BLOCK | EA |
| 32 | 2 | 154-0867 | CLEANER HOSE SPRING | EA |
| 33 | 1 | 153-2030 | ACORN NUT 3/8 - 16 | EA |
| 34 | 1 | 154-0221 | BULK HEAD UNION | EA |
| 35* | 1 | 164-6224 | CLEANER HEAD ASSEMBLY | EA |
| 36 | 1 | 164-6048 | CLEANER HEAD ILDER MOUNT | EA |
| 37 | 1 | 154-0222 | ELBOW - 1/4 IN STEM X 1/4 IN TUBING OD | EA |
| 38 | 1 | 153-2023 | HEX NUT - 1/4-20 | EA |
| 39 | 1 | 153-2815 | HHCS - 3/8-16 X 2-1/4 (GRADE 8) | EA |
| 40 | 1 | 153-2009 | NYLON FLAT WASHER | EA |
| 41 | 1 | 154-8862 | PULLEY - (28XL037 - 1/2 BORE NO SET | EA |
| 42 | 1 | 153-2052 | HHCS - 1/4-20 X 7/8" | EA |
| 43 | 1 | 153-2016 | LOCK WASHER 3/8" | EA |
| 44 | 1 | 153-2025 | HEX NUT - 3/8-16 | EA |

*PINDECK TREATMENT UPGRADED MACHINES ONLY

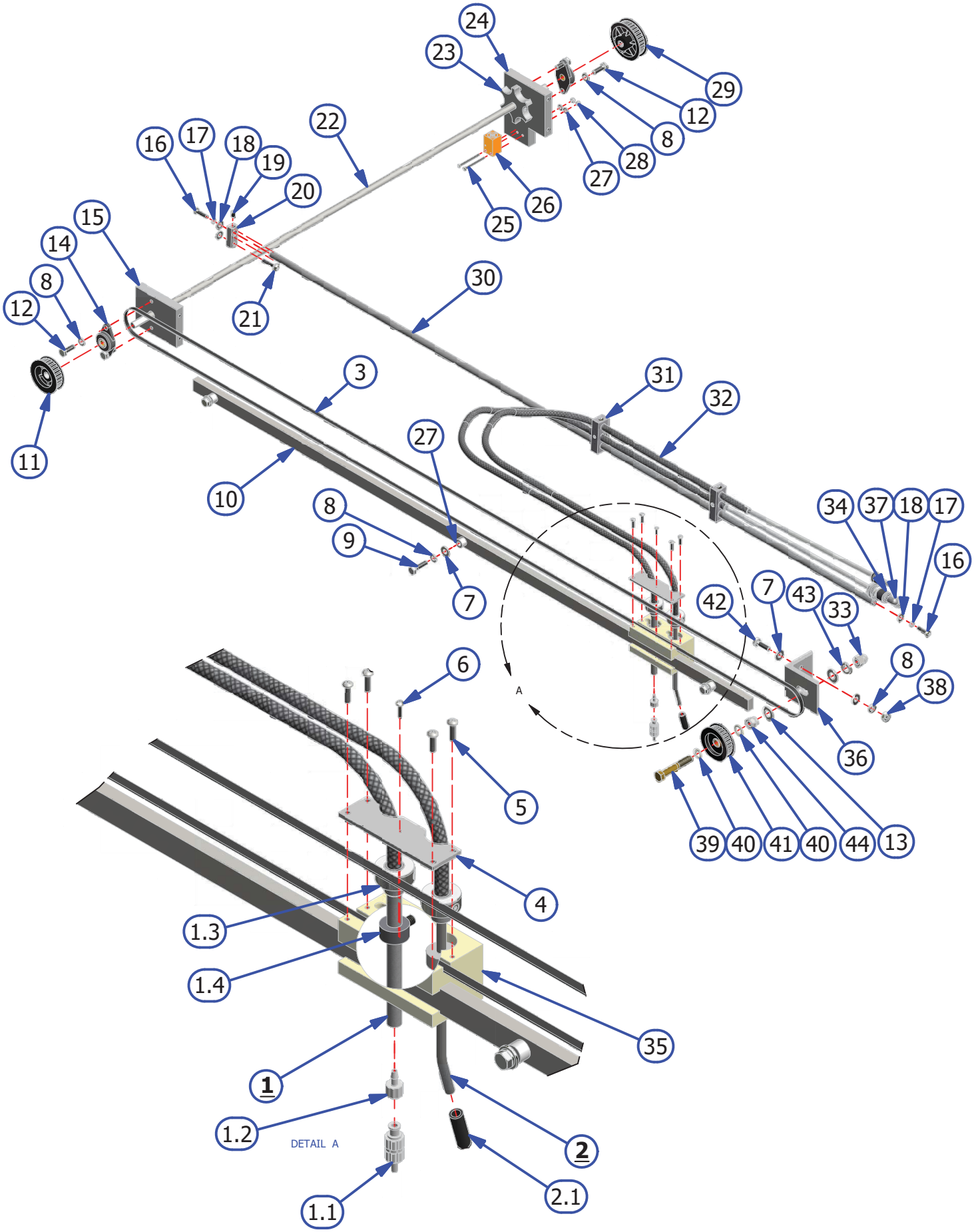
24
23
29
12
8
28
27
22
16
17
18
19
20
26
25
15
14
8
12
21
30
3
31
32
11
10
27
8
9
7
34
37
18
17
16
42
7
43
33
8
38
36
A
6
5
4
1.3
1.4
35
1
1.2
DETAIL A
2
1.1
2.1
39
40
41
40
44
13

# DUSTER ASSEMBLY

REV. 1/18

| INDEX NUMBER | QTY. | PART NUMBER | DESCRIPTION | UOM |
|---|---|---|---|---|
| **1** | **1** | **153-8839** | **CUSHION ROLLER WITH WRAP ASSEMBLY** | EA |
| 1.1 | | 154-8839A | CUSHION ROLLER COVER - SIZE A | EA |
| 1.2 | | 154-8839B | CUSHION ROLLER COVER - SIZE B | EA |
| 1.3 | | 154-8839C | CUSHION ROLLER COVER - SIZE C | EA |
| 1.4 | | 154-8839D | CUSHION ROLLER COVER - SIZE D | EA |
| 1.5 | | 154-8839E | CUSHION ROLLER COVER - SIZE E | EA |
| **2** | **2** | **158-8403** | **DUSTER MOTOR ASSEMBLY** | EA |
| **3** | **1** | **153-8824** | **PVC TAKE UP REEL** | EA |
| 4 | 8 | 153-2003 | #10 - FLATWASHER | EA |
| 5 | 8 | 153-2091 | MS PHILLIPS - 10-32 X 3/4 | EA |
| 6 | 2 | 153-2050 | SET SCREW 1/4-28 X 3/8 | EA |
| 7 | 1 | 153-8201B | DUSTER DRIVE HUB ASSEMBLY (1/4-28) | EA |
| 8 | 4 | 153-2603 | HHCS - 1/4-20 X 3/4 | EA |
| 9 | 2 | 153-2014 | LOCK WASHER 1/4" | EA |
| 10 | 8 | 153-2004 | FLAT WASHER 1/4-20 | EA |
| 11 | 2 | 164-6175 | CUSHION ROLLER STUD | EA |
| 12 | 4 | 164-2081 | DUSTER SPRING FOR STUD MOUNT | EA |
| 13 | 2 | 164-6174 | DUSTER PLUG STUD | EA |
| 14 | 2 | 153-2090 | MS - PHILLIPS - -32 X 1-1/2 | EA |
| 15 | 2 | 164-8823 | CUSHION ROLLER ARM ASSY (STUD MOUNT) | EA |
| 16 | 2 | 153-2414 | HEX NUT 8-32 | EA |
| 17 | 8 | 153-2018 | LOCKNUT 6-32 | EA |
| 18 | 2 | 154-1603 | MICROSWITCH WITHOUT ROLLER (LARGE) | EA |
| 19 | 8 | 153-2001 | FLAT WASHER #6 | EA |
| 20 | 4 | 153-2085 | MS PHILLIPS - 6-32 X 1 1/4 | EA |
| 21 | 2 | 153-9051 | CUSHION ROLLER PLUG WITH STUD | EA |
| 22 | 1 | 153-0429 | DUSTER ROLL SUPPORT PIPE (40 INCH) | EA |
| 23 | 1 | 164-6108A | DUSTER PLUG CARDBOARD CORE (STUD MOUNT) | EA |
| 24 | 1 | 164-6109A | DUSTER PLUG FOR PVC CORE (STUD MOUNT) | EA |
| 25 | 1 | 153-8202B | DUSTER SOLID DRIVE HUB (PVC) | EA |
| 26 | 1 | 153-0047EZ | K2 SELECT DUSTER CLOTH (BOX OF 4) | CASE |
| 27 | 2 | 153-2006 | FLATWASHER - 3/8" | EA |

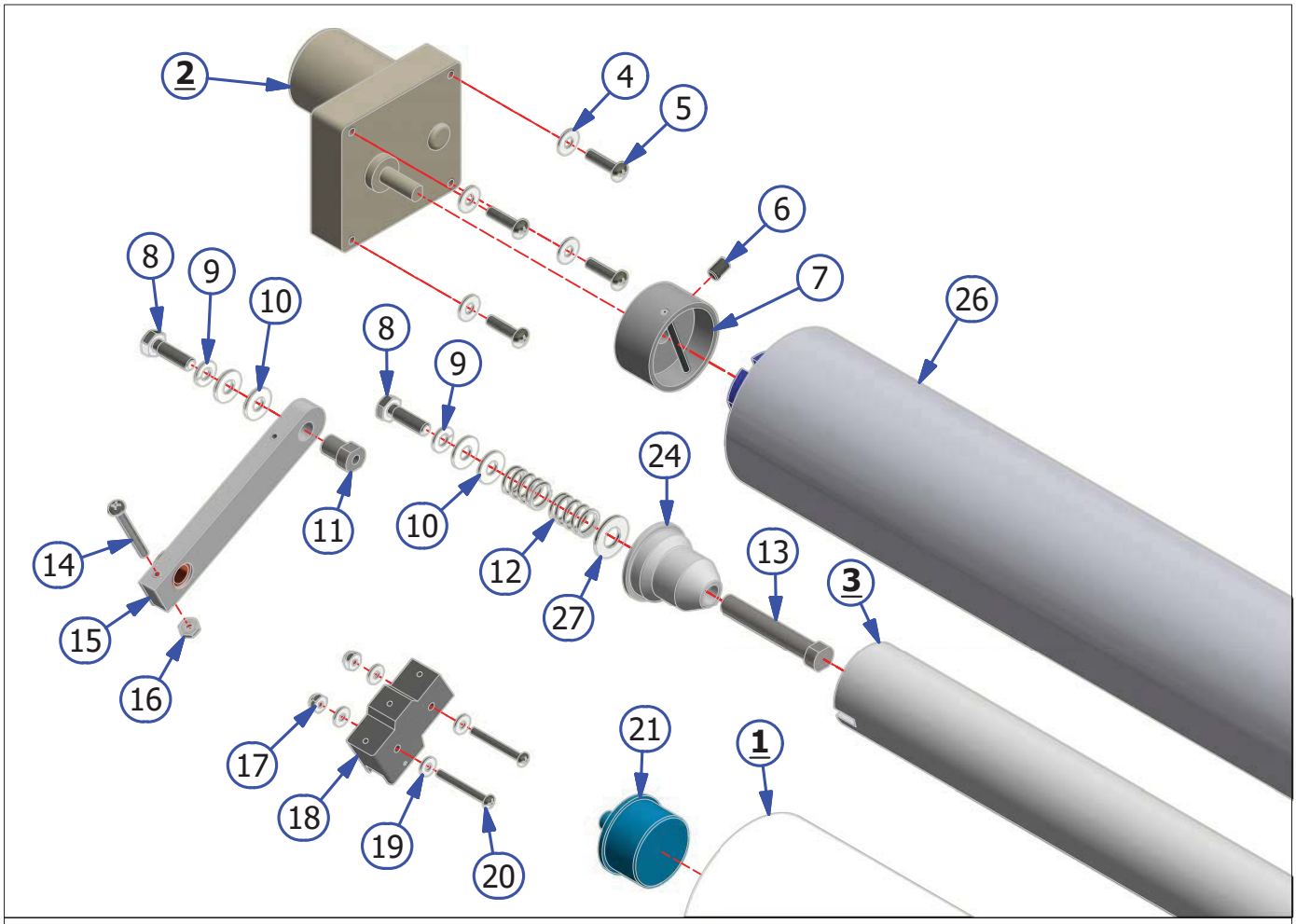
2
4
5
6
7
26
8
9
10
8
9
24
14
11
10
12
27
13
3
15
16
17
18
19
20
21
1

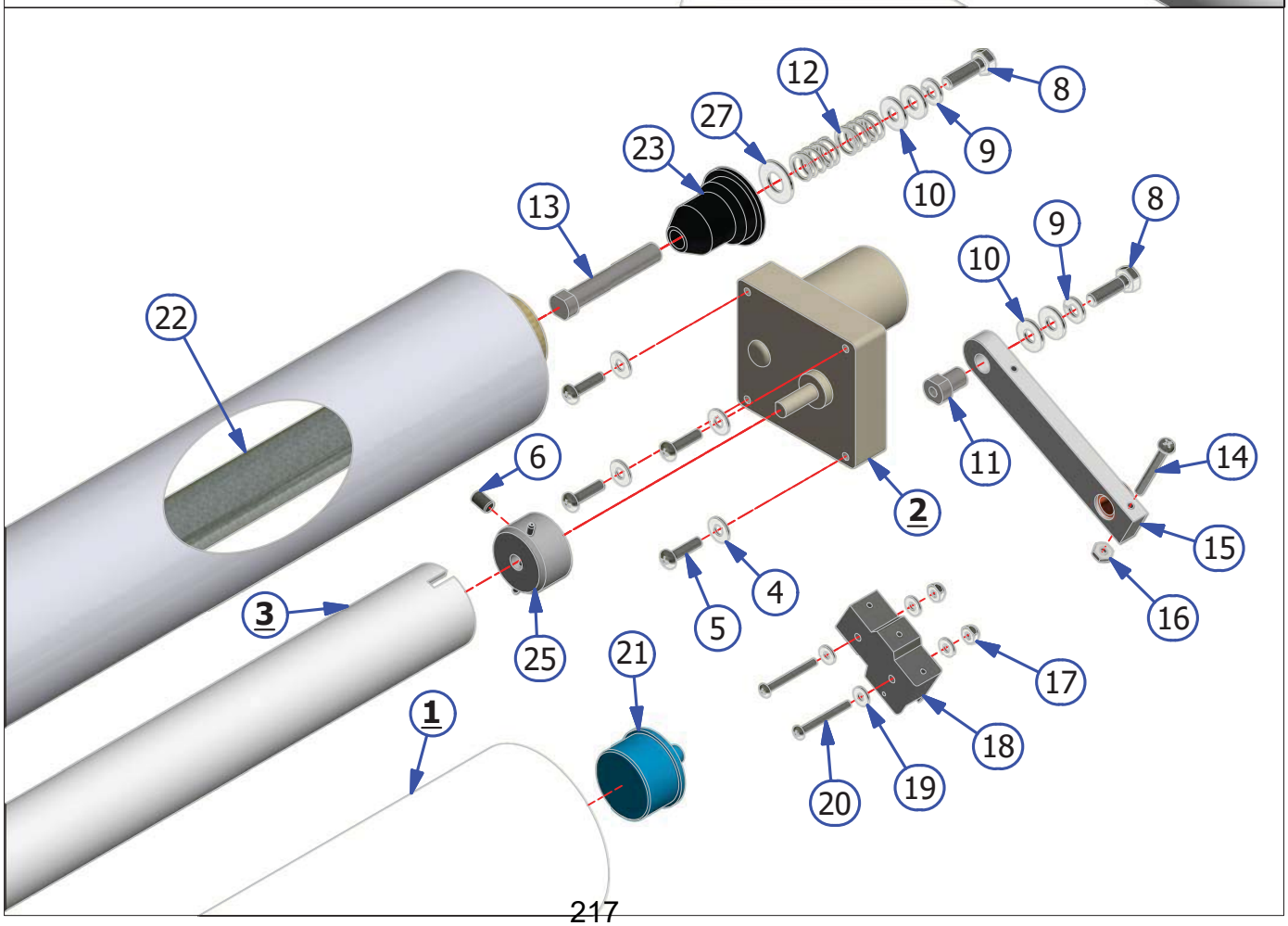
12
8
27
9
23
10
13
9
8
22
10
6
11
14
2
15
4
5
16
3
25
21
17
1
18
20
19

# RECOVERY TANK

REV. 2/16

| INDEX NUMBER | QTY. | PART NUMBER | DESCRIPTION | UOM |
|---|---|---|---|---|
| **1** | 1 | 164-8017 | FLEX RECOVERY TANK | EA |
| 1.1 | 1 | 164-8017F | RECOVERY TANK FILTER | EA |
| | | | | |
| 2 | 12 | 153-2968 | SCREW - 1/4-20 X 3/4 FHSHCS | EA |
| 3 | 1 | 164-6120 | FLEX RECOVERY TANK COVER PLATE | EA |
| 4 | 1 | 153-8827T | 1-1/4 PVC ELBOW-TANK INLET (NO THREADS) | EA |
| 5 | 6 | 153-2406 | HOSE CLAMP (2 INCH) | EA |
| 6 | 1 | 154-0260 | FLEXIBLE HOSE - SOLD BY THE INCH | IN |
| 7 | 1 | 154-0607 | PVC ELBOW - 1-1/2 BARB X 1-1/2 BARB | EA |
| 8 | 1 | 158-6244 | ELBOW -RECOVERY TANK WITH TAPPED HOLE | EA |
| 9 | 1 | 154-0223 | ELBOW - 1/4" TUBE X 1/4" NPT | EA |
| 10 | 1 | 158-0405 | FLEX RECOVERY TANK GASKET | EA |

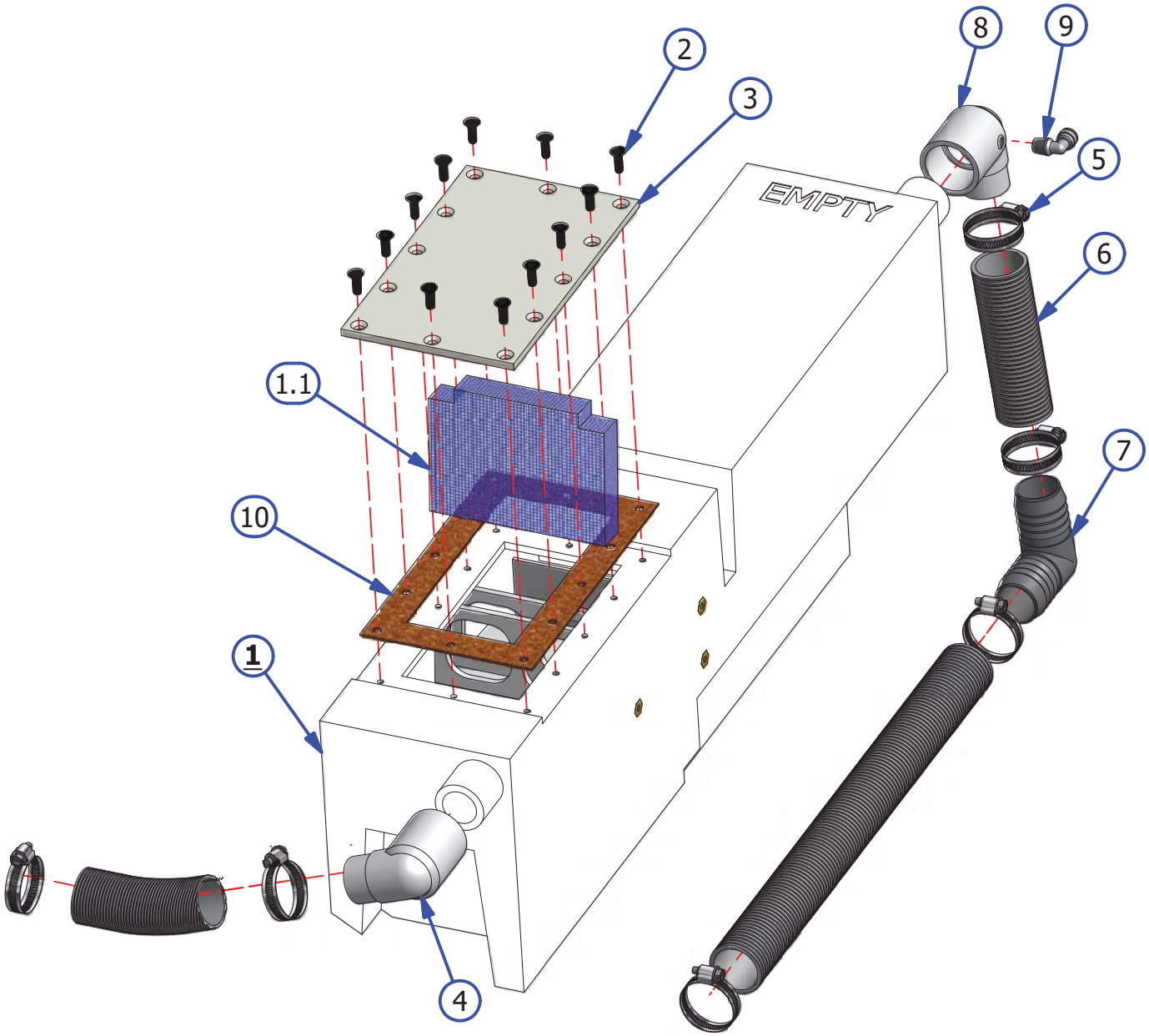
EMPTY
1
1.1
2
3
4
5
6
7
8
9
10

# SQUEEGEE ASSEMBLY

REV. 10/18

| INDEX NUMBER | QTY. | PART NUMBER | DESCRIPTION | UOM |
|---|---|---|---|---|
| **1** | 1 | 164-8038K | SQUEEGEE BLADE AND GASKET REPLACEMENT (1 SET) | EA |
| 1.1 | 1 | 164-0003 | GASKET | EA |
| **2** | 1 | 158-8402 | MOTOR ASSEMBLY -24VDC | EA |
| **3** | 1 | 158-8634 | SQUEEGEE/BRUSH MOUNT PLATE ASSEMBLY | EA |
| | 1 | 158-9614 | BALL BEARING MINITURE | EA |
| 4 | 2 | 153-2020 | LOCKNUT - 1/4-20 (NYLOK) | EA |
| 5 | 6 | 153-2004 | 1/4 FLATWASHER | EA |
| 6 | 1 | 154-6677A | SQUEEGEE HOSE ADAPTER NYLON | EA |
| 7 | 1 | 154-6339 | SQUEEGEE MOUNT ANGLE - BLACK (USE 154-6339-2850) | EA |
| 8 | 2 | 164-2023 | BHSCS 1/4-20 X 3/4 | EA |
| 9 | 1 | 164-6074 | EXTRUDED SQUEEGEE CHANNEL | EA |
| 10 | 1 | 164-6075 | MACHINED SQUEEGEE CHANNEL INSERT | EA |
| 11 | 3 | 153-2503 | FHSS - 5/16-18 X 1-1/4 | EA |
| 12 | 1 | 154-6824 | SQUEEGEE CAM SWITCH PLATE | EA |
| 13 | 4 | 153-2002 | #8 FLATWASHER | EA |
| 14 | 2 | 153-2086 | MS PHILLIPS - 8-32 X 5/8 | EA |
| 15 | 2 | 153-2727 | 4-40 X 1-1/4 FHMS | EA |
| 16 | 2 | 153-2019 | LOCKNUT - 8-32 (NYLOK) | EA |
| 17 | 2 | 153-2231 | LOCKNUT - 4-40 | EA |
| 18 | 2 | 153-1203 | MICROSWITCH W/ROLLER | EA |
| 19 | 2 | 153-2303 | SHOULDER BOLT-3/8 X 5/8 (5/16-18) | EA |
| 20 | 1 | 154-8802 | SQUEEGEE ADJUSTMENT ARM | EA |
| 21 | 2 | 153-0211 | ROD END | EA |
| 22 | 2 | 153-2061 | HHCS - 5/16-18 X 1 | EA |
| 23 | 5 | 153-2005 | 5/16 FLATWASHER | EA |
| 24 | 3 | 153-2027A | JAM NUT - 5/16-18 | EA |
| 25 | 1 | 154-6243 | MOTOR CAM-DUAL LOBES (STACKED SWITCHES) | EA |
| 26 | 4 | 153-2079 | FHCS - 1/4 X 20 1 BLACK ALLOY | EA |
| 27 | 4 | 153-2014 | LOCK WASHER 1/4" | EA |
| 28 | 4 | 153-2023 | 1/4-20 HEX NUT | EA |
| 29 | 2 | 153-9803 | BUSHING | EA |
| 30 | 1 | 153-2513 | FHSS - 5/16-18 X 1-1/2 | EA |
| 31 | 1 | 164-6176 | FAILSAFE SENSOR MOUNT PLATE | EA |
| 32 | 1 | 164-1241 | FAILSAFE BEAM SENSOR | EA |

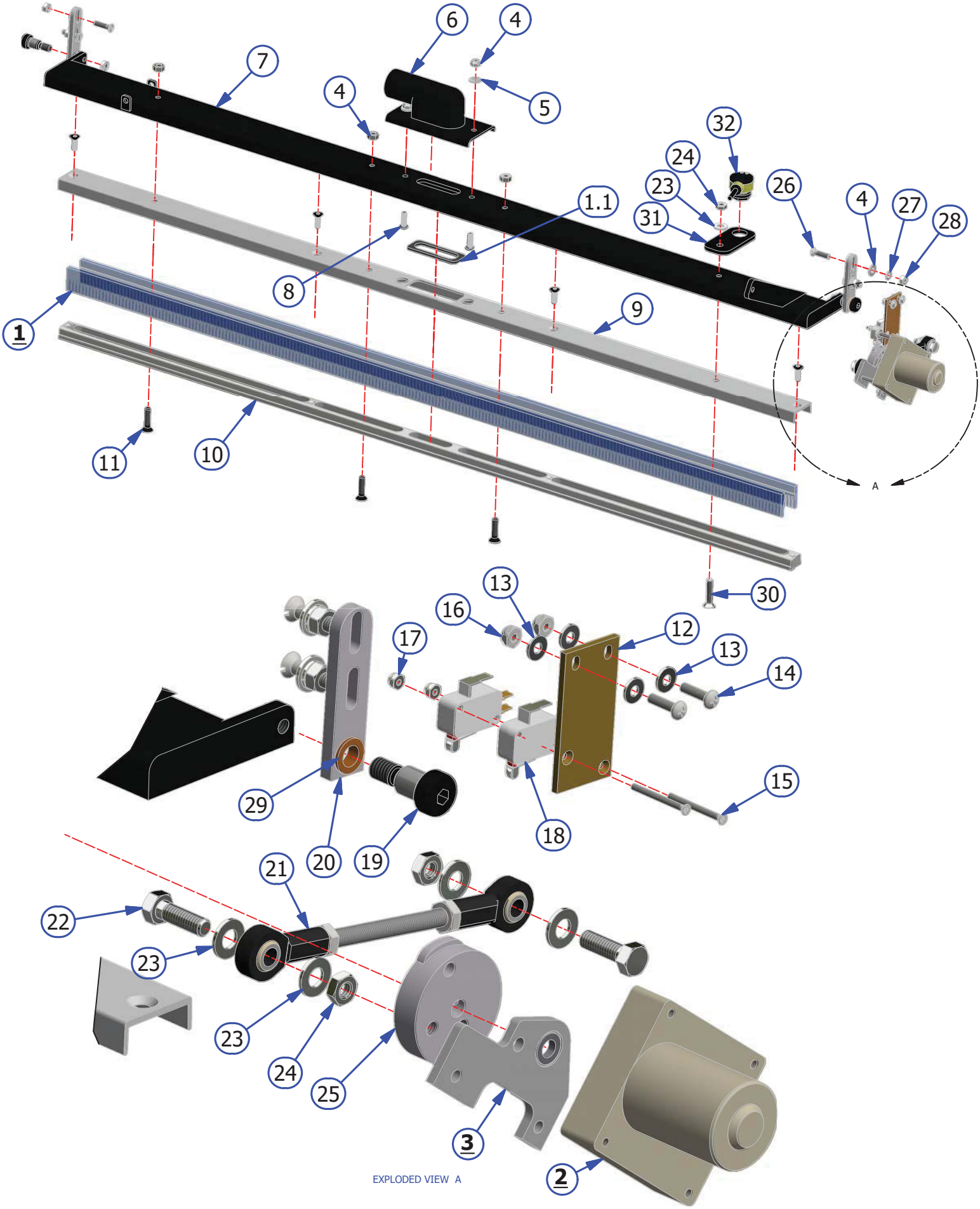


EXPLODED VIEW A

REV. 10/18

# PINDECK TREATMENT ASSEMBLY

# *UPGRADE ONLY - 164-8202

| INDEX NUMBER | QTY. | PART NUMBER | DESCRIPTION | UOM |
|---|---|---|---|---|
| **1** | 1 | 156-8310 | SPOT ON PINDECK TREATMENT (CASE OF 4) | EA |
| **2** | 1 | 164-8226 | PINDECK SPRAY SOLENOID | EA |
| 3 | 1 | 154-0248 | REDUCING UNION | EA |
| 4 | 1 | 154-0222 | ELBOW 1/4" STEM X 1/4" TUBING OD | EA |
| 5 | 1 | 164-2065 | SHAFT COLLAR 3/16" | EA |
| 6 | 1 | 164-1227 | SOLENOID SPRING ASSEMBLY | EA |
| 7 | 1 | 164-6242 | SOLENOID BRACKET ASSEMBLY | EA |
| 8 | 1 | 164-6245 | DRIP TRAY ASSEMBLY | EA |
| 9 | 1 | 164-6241 | CAN CLIP BRACKET | EA |
| 10 | 1 | 164-6240 | CAN CLIP | EA |
| 11 | 4 | 153-2742 | FHMS 1/4-20 X 1/2 | EA |
| 12 | 1 | 164-6238 | CAN CRADLE BOTTOM | EA |
| 13 | 1 | 164-6237 | CAN CRADLE TOP | EA |
| 14 | 1 | 153-2004 | FLAT WASHER 1/4" | EA |
| 15 | 1 | 164-2016 | THUMB SCREW - KNURLED HEAD | EA |
| 16 | 1 | 164-6246 | SOLENOID COVER | EA |
| 17 | 3 | 153-2086A | MS PHILLIPS 8-32 X 3/8 | EA |
| 18 | 3 | 153-2013 | LOCK WASHER #10 | EA |
| 19 | 1 | 153-2002 | FLAT WASHER #10 | EA |
| 20 | 1 | 153-2052 | HHCS 1/4-20 X 1" | EA |
| 21 | 1 | 153-2510 | NYLON WASHER 1/4" | EA |
| 22 | 1 | 153-2014 | LOCK WASHER 1/4" | EA |
| 23 | | 153-2542 | FHSS ALLEN 8-32 X 3/4 | EA |
| 24 | 1 | 153-2020 | LOCKNUT (NYLOCK 1/4") | EA |
| 25 | 1 | 153-2998 | FHCS SCREW 10-24 X 1/2" BLACK OXID | EA |
| 26 | 1 | 164-2053 | RECTANGLE CAP | EA |

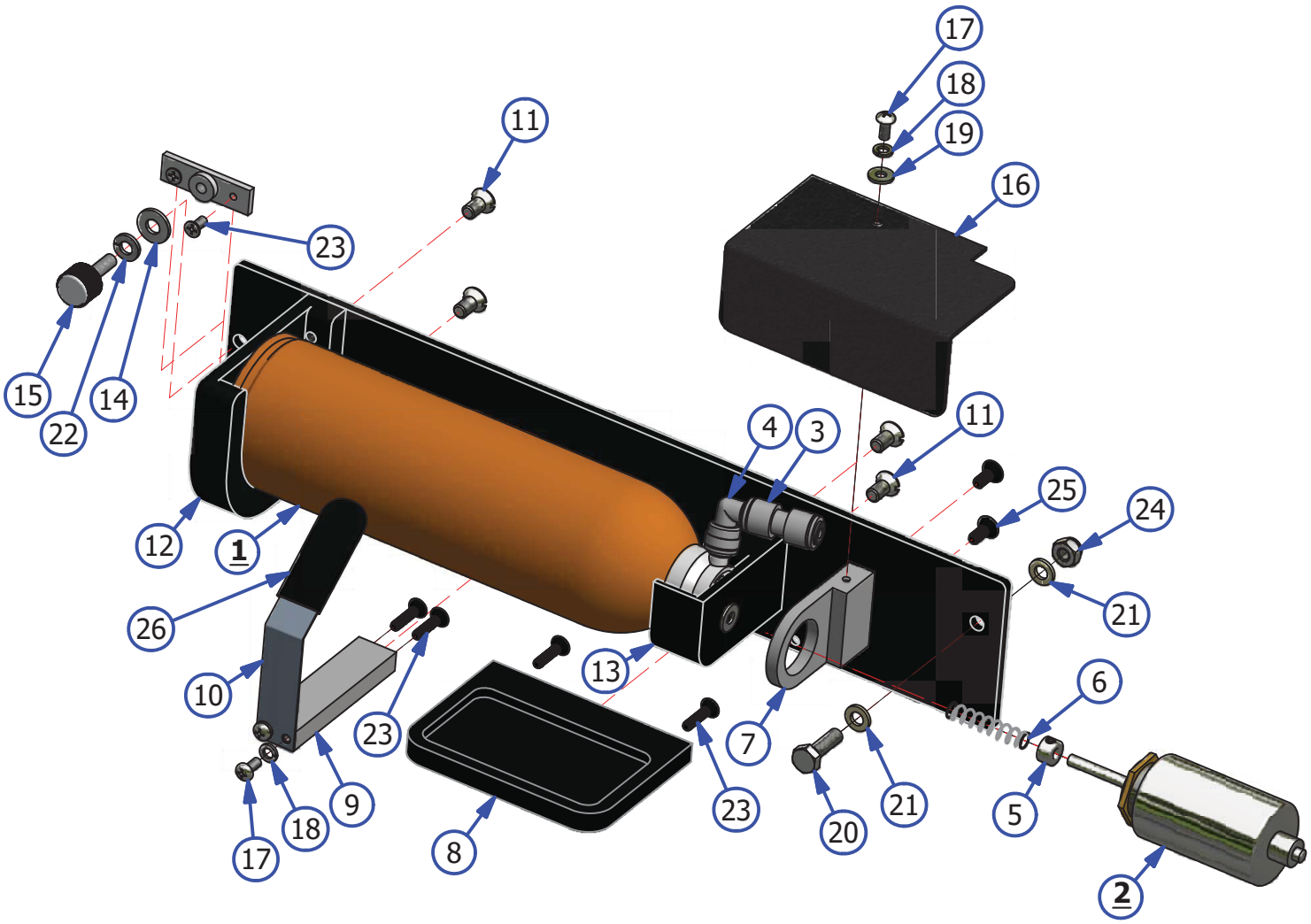
17
18
19
16
11
23
15
22
14
4
3
11
25
24
12
1
21
26
13
10
23
6
7
23
9
18
17
8
20
21
5
2

# ZTR ASSEMBLY - LEFT

REV. 3/16

| INDEX NUMBER | QTY. | PART NUMBER | DESCRIPTION | UOM |
|---|---|---|---|---|
| 1 | 1 | 164-6034 | KICK UP WHEEL MOUNTING BLOCK | EA |
| 2 | 3 | 153-2939 | NYLON WASHER 3/4" X 1/16" | EA |
| 3 | 2 | 158-7001 | DRIVE WHEEL 4.5 IN | EA |
| 4 | 1 | 164-6030 | FLEX KICK-UP WHEEL SHAFT | EA |
| 5 | 1 | 158-6705 | BUMPER WHEEL SIDE POST | EA |
| 6 | 1 | 164-9005 | CHAIN (35P67) ZTR KICKUP | EA |
| 7 | 6 | 153-2602 | HHCS - 5/16-18 X 3/4 | EA |
| 8 | 6 | 153-2015 | 5/16 LOCKWASHER | EA |
| 9 | 4 | 153-2005 | 5/16 FLATWASHER | EA |
| 10 | 1 | 158-9602 | SPROCKET 40BAH 3/4 BORE WITH KEYWAY AND SET | EA |
| 11 | 1 | 153-2604 | MS FLAT PHILLIPS - 10-32 X 1/2 | EA |
| 12 | 1 | 164-6038 | BUMPER WHEEL MOUNT ANGLE | EA |
| 13 | 1 | 153-7203 | BUMPER WHEEL | EA |
| 14 | 2 | 153-2006 | 3/8 FLATWASHER | EA |
| 15 | 1 | 153-2815 | HHCS - 3/8-16 X 2-1/4 (GRADE 8) | EA |
| 16 | 1 | 153-2531 | NYLON FLAT WASHER - 3/8 (0.030) | EA |
| 17 | 1 | 153-2027 | JAM NUT - 3/8-16 | EA |
| 18 | 1 | 153-2016 | 3/8 LOCKWASHER | EA |
| 19 | 1 | 164-2005 | SQUARE NUT - 3/8-16 | EA |
| 20 | 1 | 164-6039 | BUMPER WHEEL NUT RETAINER | EA |
| 21 | 4 | 153-2014 | 1/4 LOCKWASHER | EA |
| 22 | 4 | 153-2052A | BHSS - 1/4-20 X 7/8 | EA |
| 23 | 2 | 153-2066 | HHCS - 3/8-16 X 1 | EA |
| 24 | 1 | 164-6222 | ZTR PROXIMITY SENSOR MOUNT | EA |
| 25 | 2 | 164-7002A | 1" WIDE KICK UP WHEEL ASSEMBLY | EA |
| 26 | 1 | 164-6162 | GUARD STAND OFF | EA |
| 27 | 2 | 153-2802A | FHSS - 5/16 X 5/8 | EA |
| 28 | 1 | 158-8601 | ZTR SHAFT BUSHING BLOCK ASSEMBLY | EA |
| 29 | 1 | 153-2100 | KEYSTOCK - 3/16 X 3/4 | EA |
| 30 | 1 | 153-2937 | SHAFT COLLAR 3/4" ID | EA |
| 31 | 2 | 153-2086 | MS PHILLIPS - 8-32 X 5/8 | EA |
| 32 | 1 | 164-8220 | KICK UP WHEEL ANGLE ASSEMBLY | EA |
| 33 | 2 | 153-2055 | HHCS - 1/4-20 X 1-1/2 | EA |
| 34 | 1 | 154-1220 | INDUCTIVE PROXIMITY SENSOR | EA |
| 35 | 1 | 153-9816 | 3/4 IN FLANGED BEARING - 5/16-18 TAPPED | EA |
| 36 | 2 | 153-2216A | MS PHILLIPS - 4-40 X 7/8 | EA |
| 37 | 1 | 153-2528 | HHCS - 1/4"-20 X 1-3/4" | EA |
| 38 | 1 | 153-2002 | #8 FLATWASHER | EA |
| 39 | 1 | 153-2013 | #10 LOCKWASHER | EA |
| 40 | 1 | 153-2087 | MS PHILLIPS - 8-32 X 3/4 | EA |
| 41 | 1 | 164-6033 | FLEX ZTR SUPPORT MOUNT | EA |
| 42 | 1 | 153-2304 | JAM NUT | EA |
| 43 | 1 | 164-6031 | ZTR CHAIN TENSIONER | EA |
| 44 | 1 | 153-2078 | FHMS - 1/4-20 X 3/4" | EA |
| 45 | 1 | 164-6040 | FLEX ZTR SHAFT SUPPORT | EA |
| 46 | 1 | 164-6028 | FLEX ZTR DRIVE SHAFT - LEFT | EA |
| 47 | 2 | 164-9003 | SPROCKET - 40B10 (5/8") | EA |
| 48 | 2 | 164-2004 | SHCS - 10-24 X 1-1/2 | EA |
| 49 | 2 | 153-2035 | BLIND RIVET WASHER - 3/16 | EA |
| 50 | 2 | 153-2208 | LOCKNUT - 10-24 (NYLOK) | EA |
| 51 | 1 | 164-6221 | BUMPER WHEEL PLATE | EA |

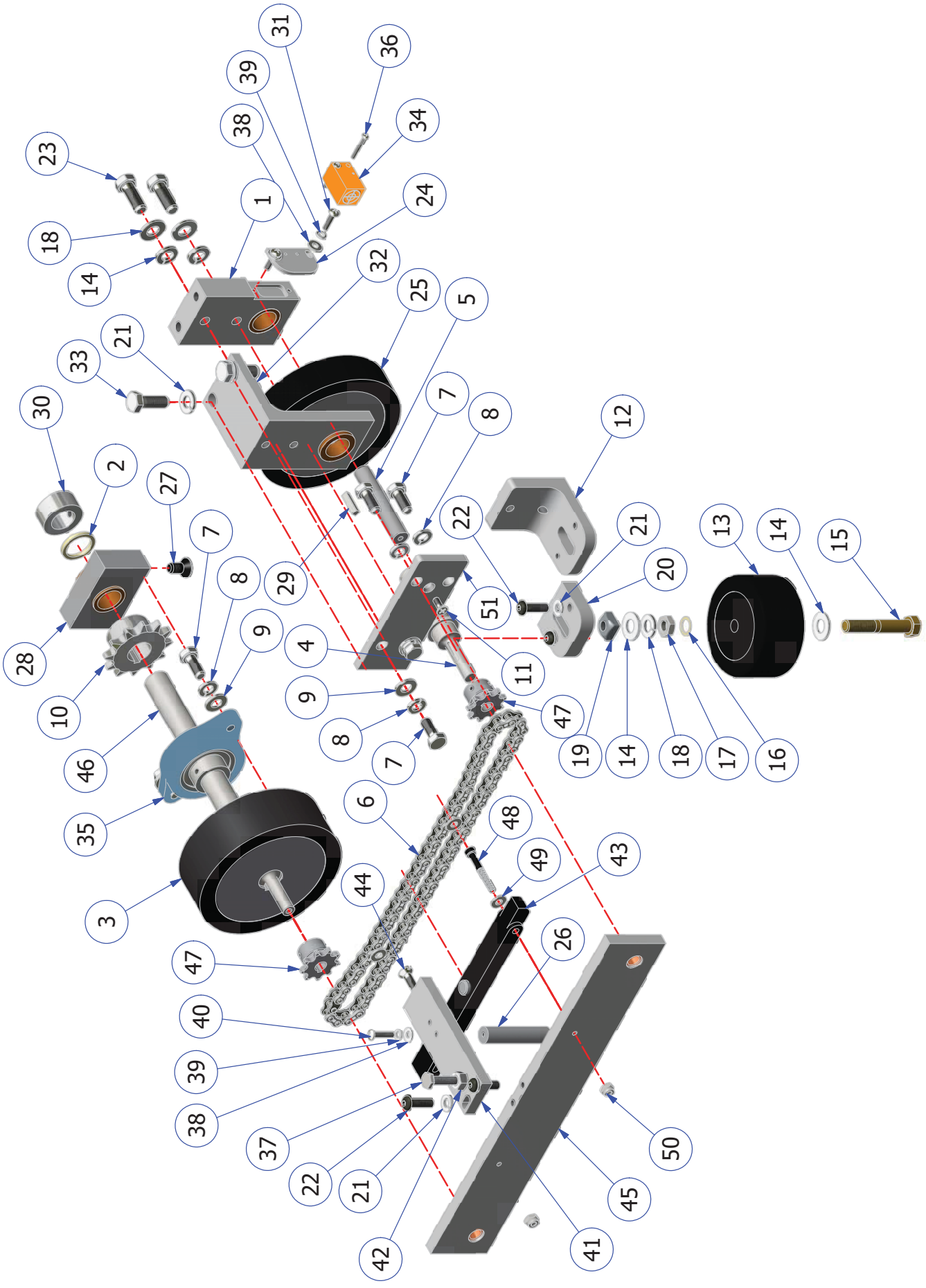
1
2
3
4
5
6
7
8
9
10
11
12
13
14
15
16
17
18
19
20
21
22
23
24
25
26
27
28
29
30
31
32
33
34
35
36
37
38
39
40
41
42
43
44
45
46
47
48
49
50
51

# ZTR ASSEMBLY - RIGHT

REV. 3/16

| INDEX NUMBER | QTY. | PART NUMBER | DESCRIPTION | UOM |
|---|---|---|---|---|
| 1 | 1 | 164-8219 | KICK UP WHEEL MOUNTING BLOCK | EA |
| 2 | 2 | 153-2939 | NYLON WASHER 3/4" X 1/16" | EA |
| 3 | 1 | 158-7001 | DRIVE WHEEL 4.5 IN | EA |
| 4 | 1 | 164-6030 | FLEX KICK-UP WHEEL SHAFT | EA |
| 5 | 1 | 164-6221 | BUMPER WHEEL PLATE | EA |
| 6 | 1 | 164-9005 | CHAIN (35P67) ZTR KICKUP | EA |
| 7 | 6 | 153-2602 | HHCS - 5/16-18 X 3/4 | EA |
| 8 | 6 | 153-2015 | 5/16 LOCKWASHER | EA |
| 9 | 4 | 153-2005 | 5/16 FLATWASHER | EA |
| 10 | 1 | 158-9602 | SPROCKET 40BAH 3/4 BORE WITH KEYWAY AND SET | EA |
| 11 | 1 | 153-2604 | MS FLAT PHILLIPS - 10-32 X 1/2 | EA |
| 12 | 1 | 164-6038 | BUMPER WHEEL MOUNT ANGLE | EA |
| 13 | 1 | 153-7203 | BUMPER WHEEL | EA |
| 14 | 2 | 153-2006 | 3/8 FLATWASHER | EA |
| 15 | 1 | 153-2815 | HHCS - 3/8-16 X 2-1/4 (GRADE 8) | EA |
| 16 | 1 | 153-2531 | NYLON FLAT WASHER - 3/8 (0.030) | EA |
| 17 | 1 | 153-2027 | JAM NUT - 3/8-16 | EA |
| 18 | 1 | 153-2016 | 3/8 LOCKWASHER | EA |
| 19 | 1 | 164-2005 | SQUARE NUT - 3/8-16 | EA |
| 20 | 1 | 164-6039 | BUMPER WHEEL NUT RETAINER | EA |
| 21 | 4 | 153-2014 | 1/4 LOCKWASHER | EA |
| 22 | 4 | 153-2052A | BHSS - 1/4-20 X 7/8 | EA |
| 23 | 2 | 153-2066 | HHCS - 3/8-16 X 1 | EA |
| 24 | 1 | 164-6222 | ZTR PROXIMITY SENSOR MOUNT | EA |
| 25 | 2 | 164-7002A | 1" WIDE KICK UP WHEEL ASSEMBLY | EA |
| 26 | 1 | 164-6162 | GUARD STAND OFF | EA |
| 27 | 2 | 153-2802 | FHSS - 5/16 X 5/8 | EA |
| 28 | 1 | 158-8601 | ZTR SHAFT BUSHING BLOCK ASSEMBLY | EA |
| 29 | 1 | 153-2100 | KEYSTOCK - 3/16 X 3/4 | EA |
| 30 | 1 | 158-9601 | BUSHING FLANGED - 3/4 ID X 7/8 OD | EA |
| 31 | 2 | 153-2086 | MS PHILLIPS - 8-32 X 5/8 | EA |
| 32 | 1 | 164-8220 | KICK UP WHEEL ANGLE ASSEMBLY | EA |
| 33 | 4 | 153-2066 | HHCS - 3/8-16 x 1 | EA |
| 34 | 1 | 154-1220 | INDUCTIVE PROXIMITY SENSOR | EA |
| 35 | 1 | 153-9816 | 3/4 IN FLANGED BEARING - 5/16-18 TAPPED | EA |
| 36 | 2 | 153-2216A | MS PHILLIPS - 4-40 X 7/8 | EA |
| 37 | 1 | 153-2528 | HHCS - 1/4"-20 X 1-3/4" | EA |
| 38 | 1 | 153-2002 | #8 FLATWASHER | EA |
| 39 | 1 | 153-2013 | #10 LOCKWASHER | EA |
| 40 | 1 | 153-2087 | MS PHILLIPS - 8-32 X 3/4 | EA |
| 41 | 1 | 164-6033 | FLEX ZTR SUPPORT MOUNT | EA |
| 42 | 1 | 153-2304 | JAM NUT | EA |
| 43 | 1 | 164-6031 | ZTR CHAIN TENSIONER | EA |
| 44 | 1 | 153-2078 | FHMS - 1/4-20 X 1" SELF LOCKING | EA |
| 45 | 1 | 153-2102 | KEYSTOCK - 3/16 X 1-1/4" | EA |
| 46 | 1 | 164-6029 | FLEX ZTR DRIVE SHAFT - RIGHT | EA |
| 47 | 2 | 164-9003 | SPROCKET - 40B10 (5/8") | EA |
| 48 | 2 | 164-2004 | SHCS - 10-24 X 1-1/2 | EA |
| 49 | 4 | 153-2035 | BLIND RIVET WASHER - 3/16 | EA |
| 50 | 2 | 153-2208 | LOCKNUT - 10-24 (NYLOK) | EA |
| 51 | 1 | 164-6040 | FLEX ZTR SHAFT SUPPORT | EA |
| 52 | 1 | 158-6705 | BUMPER WHEEL SIDE POST | EA |

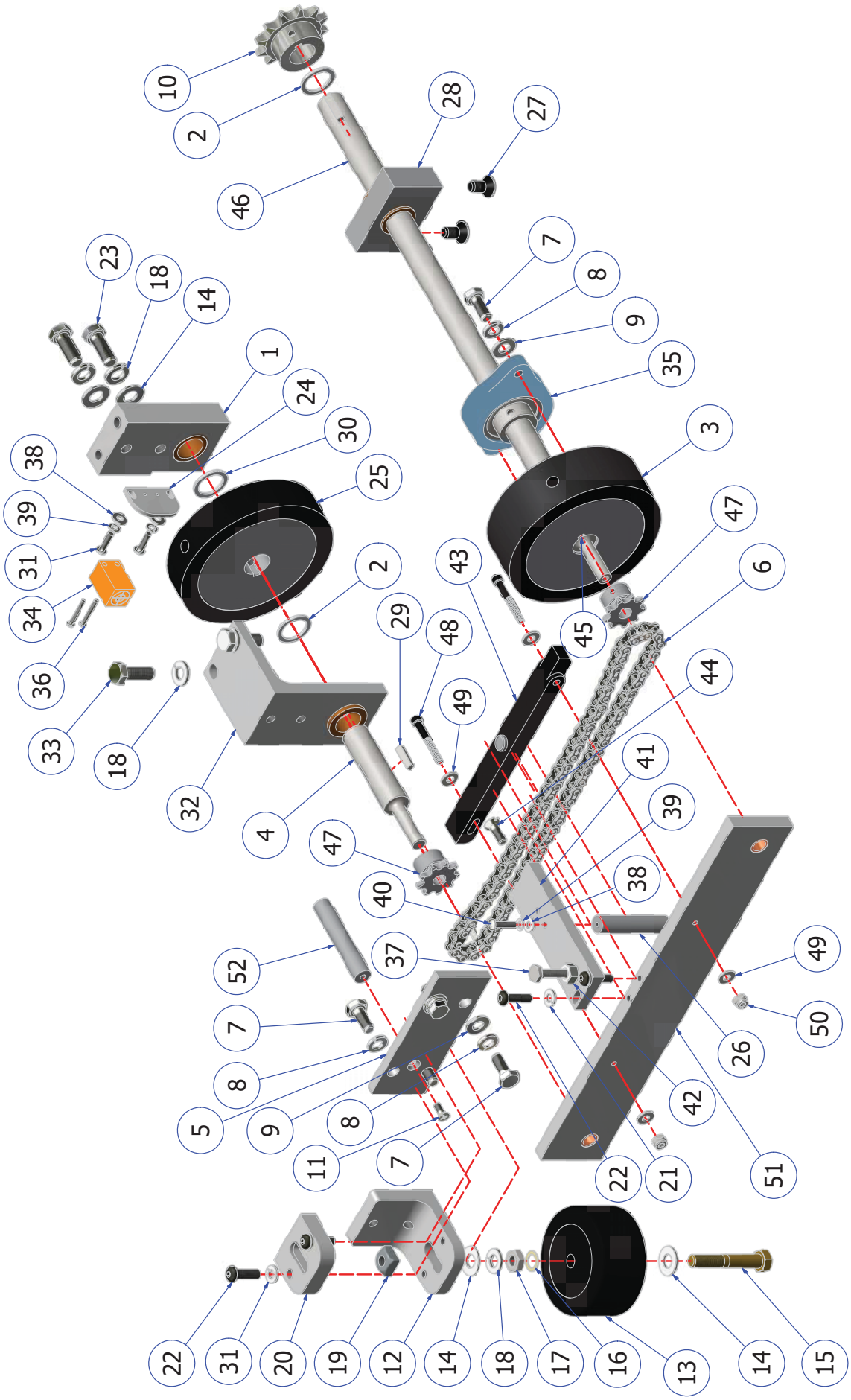
10
2
28
27
46
23
18
14
7
8
9
35
1
24
30
3
38
25
39
31
47
2
43
6
34
29
48
45
36
44
33
18
49
32
41
4
39
47
38
40
52
37
49
7
50
8
26
5
9
8
42
11
7
22
21
51
22
31
20
19
12
14
18
17
16
13
14
15

# CHAPTER 9

## FLEX ELECTRICAL DRAWINGS

The following diagrams show wiring schematics for the Kustodian Walker. Detailed diagrams for the Ion follow this section. If you have any questions please call 863-734-0200 or email tech@kegel.net .


| | |
|---|---|
| Flex Motor Wiring Layout | 230 |
| Flex Output Wiring Layout | 231 |
| Flex Input Wiring Layout | 232 |
| Flex Speed Control Wiring Layout | 233 |
| Flex Analog Wiring Layout | 234 |
| Flex Terminal Block Wiring Layout | 235 |
| Flex Power Wiring Layout | 236 |
| Flex Voltage Regulator Wiring Layout | 237 |
| Flex Oil Pump Driver & Motor Wiring Layout | 238 |
| Flex Oil-Cleaner Head Driver & Motor Wiring Layout | 239 |
| Flex L-R & R-L Head Proximity Sensor Wiring Layout | 240 |
| Flex Oil Valves Wiring Layout | 241 |
| Flex Buffer Motor Wiring Layout | 242 |
| Flex Variable Buffer Wiring Layout | 243 |
| Flex Brush Lift Motor Wiring Layout | 244 |
| Flex Vacuum Wiring Layout | 245 |
| Flex Squeegee Motor & Switch Wiring Layout | 246 |
| Flex Duster Unwind Motor & Switch Wiring Layout | 247 |
| Flex Duster Windup Motor & Switch Wiring Layout | 248 |
| Flex Cleaner Pump #1 Wiring Layout | 249 |
| Flex Cleaner Pump #2 Wiring Layout | 250 |
| Flex Start Button & Duster Presoak Button Wiring Layout | 251 |
| Flex Oil Float & Cleaner Float Wiring Layout | 252 |
| Flex Speed Tach & LDS Wiring Layout | 253 |
| Flex LED Tank Light Wiring Layout | 254 |
| Flex Trigger Solenoid Wiring Layout | 255 |

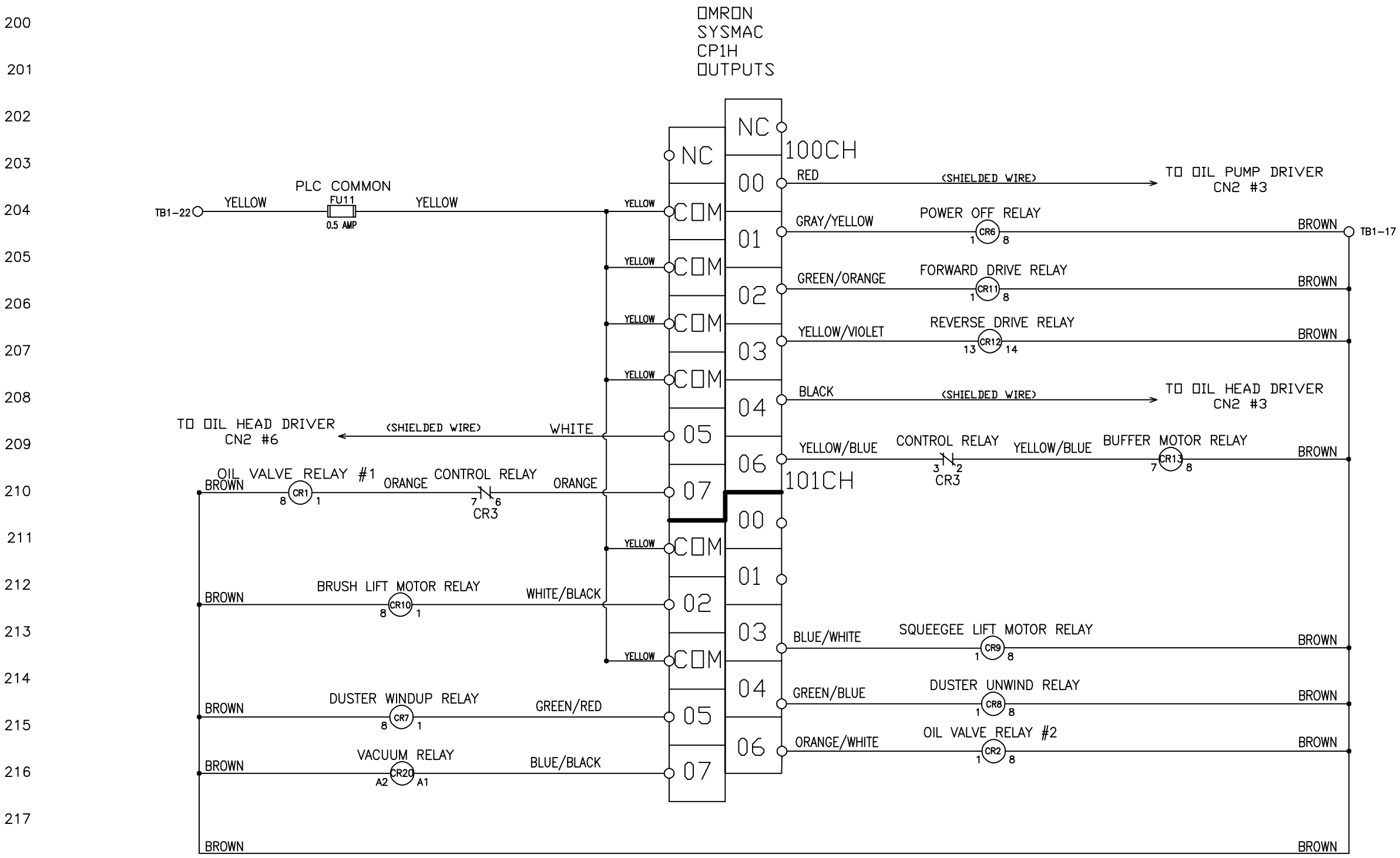


## LEGEND

CR1 - OIL VALVE RELAY TANK A
CR2 - OIL VALVE RELAY TANK B
CR3 - CONTROL RELAY
CR4 - DUSTER POLARITY SWITCH RELAY
CR5 - PIN DECK TREATMENT RELAY
CR6 - POWER OFF RELAY
CR7 - DUSTER WINDUP MOTOR RELAY
CR8 - DUSTER UNWIND MOTOR RELAY
CR9 - SQUEEGEE LIFT MOTOR RELAY
CR10 - BRUSH LIFT MOTOR RELAY
CR11 - FORWARD DRIVE MOTOR RELAY
CR12 - REVERSE DRIVE MOTOR RELAY
CR13 - BUFFER MOTOR RELAY
CR14 -
CR15 -
CR16 -
CR17 -
CR18 -
CR19 - VACUUM MOTOR RELAY
CR20 - POWER RELAY

FU1 - DRIVE MOTOR 7.5A
FU2 - BUFFER MOTOR 10A/20A
FU3 - VACUUM MOTOR 20A
FU4 - DUSTER UNWIND 3.2A
FU5 - DUSTER WINDUP 3.2A
FU6 - SQUEEGEE MOTOR 3.2A
FU7 - BRUSH LIFT MOTOR 3.2A
FU8 - HEAD DRIVE MOTOR 2.25A
FU9 - OIL PUMP MOTOR 2.25A
FU10 - PLC INPUT POWER/L1 0.5A
FU11 - PLC OUTPUT COMMON 0.5A
FU12 - TOUCH SCREEN 0.5A
FU13 - CLEANER PUMP #1 3.2A
FU14 - CLEANER PUMP #2 3.2A
FU15 - CVR POWER 25A/30A
FU16 - LED LIGHTS 1A
FU17 - TRIGGER SOLENOID 3.2A

PL1 - 10-PIN SIDE PLUG (15)
PL2 - 10-PIN SIDE PLUG (12)
PL3 - 10-PIN SIDE PLUG (9)
PL4 - 7-PIN SIDE PLUG (15)
PL5 - 7-PIN SIDE PLUG (12)
PL6 - DRIVE SPEED BOARD PLUG (12)
PL7 - CLEANER PUMP #1 SPEED BOARD PLUG (9)
PL8 - CLEANER PUMP #2 SPEED BOARD PLUG (9)
PL9 -
PL10 - BUFFER SPEED BOARD PLUG (12)
PL11 - BUFFER MOTOR PLUG (5)
PL12 - BUFFER MOTOR VARIABLE SPEED PLUG (5)
PL13 - OIL PLATE ASSEMBLY PLUG (6)

TB1 - TERMINAL BLOCK 1 (MAIN)
TB2 - TERMINAL BLOCK 2 (10-PIN SIDE)
TB3 - TERMINAL BLOCK 3 (7-PIN SIDE)
TB4 - TERMINAL BLOCK 4 (OIL PLATE)

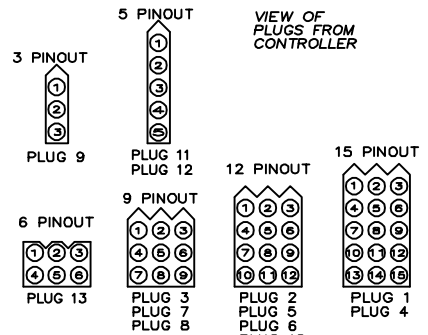


CP1 - CHARGING PLUG BATTERY (BLUE)
CP2 - CHARGING PLUG INSIDE (BLUE)
CP3 - CHARGING PLUG OUTSIDE (BLUE)
PP1 - POWER PLUG (RED)

| | | | |
|---|---|---|---|
| MATERIAL N/A | | KEGEL LLC | 1951 LONGLEAF BLVD. LAKE WALES, FL 33859 (863) 734-0200 |
| | | DESCRIPTION OUTPUT WIRING SCHEMATIC | |
| | | DO NOT SCALE DRAWING | |
| DRAWN BY SLS | DATE 07/23/18 | | |
| APPROVED: MP | REV DATE | SIZE C / QTY/MACHINE N/A / PART NUMBER FLEX 2019 | |
| DOC REV | | SCALE N/A | SHEET 2 OF 26 |

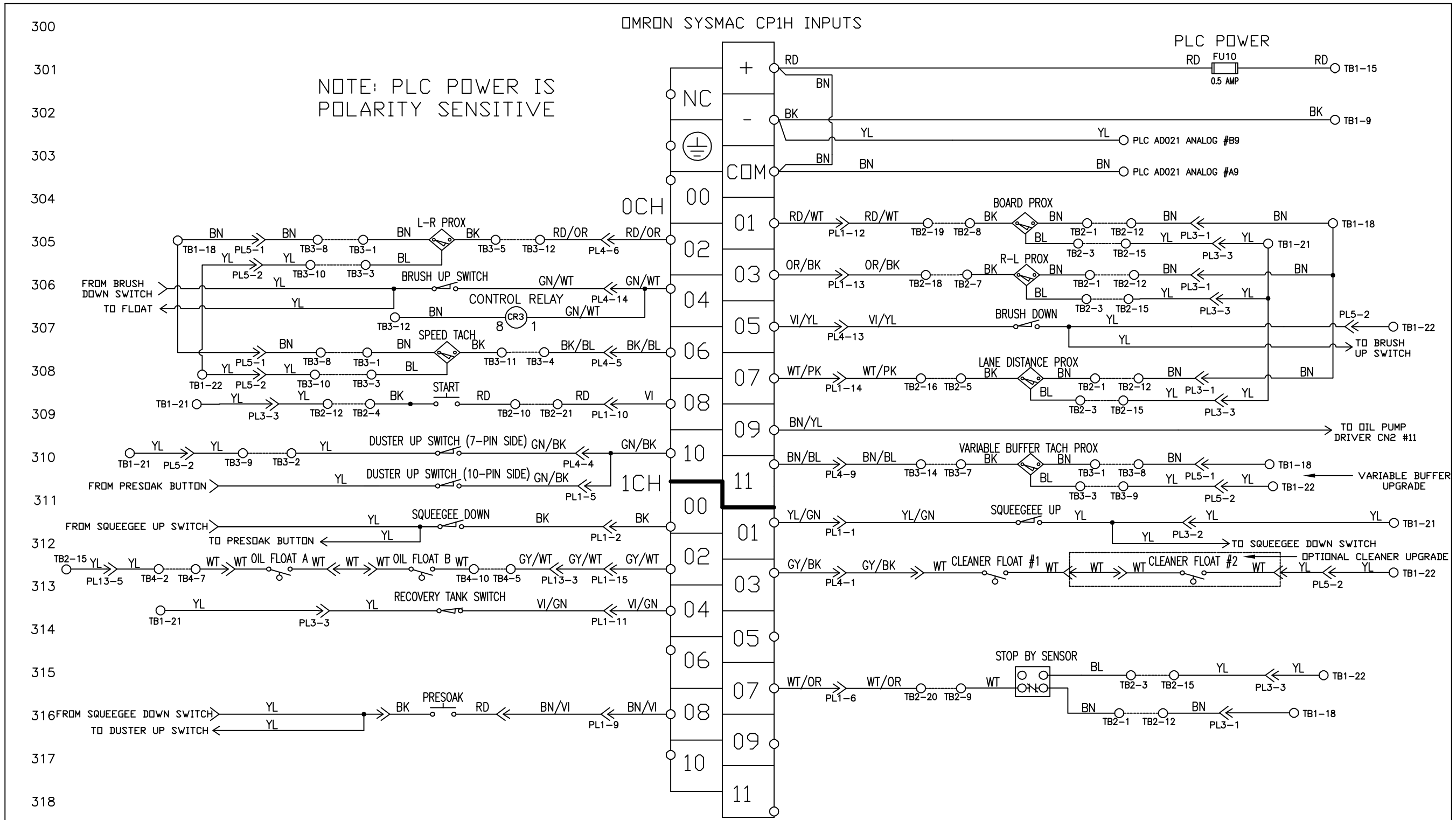


## LEGEND

CR1 - OIL VALVE RELAY TANK A
CR2 - OIL VALVE RELAY TANK B
CR3 - CONTROL RELAY
CR4 - DUSTER POLARITY SWITCH RELAY
CR5 - PIN DECK TREATMENT RELAY
CR6 - POWER OFF RELAY
CR7 - DUSTER WINDUP MOTOR RELAY
CR8 - DUSTER UNWIND MOTOR RELAY
CR9 - SQUEEGEE LIFT MOTOR RELAY
CR10 - BRUSH LIFT MOTOR RELAY
CR11 - FORWARD DRIVE MOTOR RELAY
CR12 - REVERSE DRIVE MOTOR RELAY
CR13 - BUFFER MOTOR RELAY
CR14 -
CR15 -
CR16 -
CR17 -
CR18 -
CR19 - VACUUM MOTOR RELAY
CR20 - POWER RELAY

FU1 - DRIVE MOTOR 7.5A
FU2 - BUFFER MOTOR 10A/20A
FU3 - VACUUM MOTOR 20A
FU4 - DUSTER UNWIND 3.2A
FU5 - DUSTER WINDUP 3.2A
FU6 - SQUEEGEE MOTOR 3.2A
FU7 - BRUSH LIFT MOTOR 3.2A
FU8 - HEAD DRIVE MOTOR 2.25A
FU9 - OIL PUMP MOTOR 2.25A
FU10 - PLC INPUT POWER/L1 0.5A
FU11 - PLC OUTPUT COMMON 0.5A
FU12 - TOUCH SCREEN 0.5A
FU13 - CLEANER PUMP #1 3.2A
FU14 - CLEANER PUMP #2 3.2A
FU15 - CVR POWER 25A/30A
FU16 - LED LIGHTS 1A
FU17 - TRIGGER SOLENOID 3.2A

PL1 - 10-PIN SIDE PLUG (15)
PL2 - 10-PIN SIDE PLUG (12)
PL3 - 10-PIN SIDE PLUG (9)
PL4 - 7-PIN SIDE PLUG (15)
PL5 - 7-PIN SIDE PLUG (12)
PL6 - DRIVE SPEED BOARD PLUG (12)
PL7 - CLEANER PUMP #1 SPEED BOARD PLUG (9)
PL8 - CLEANER PUMP #2 SPEED BOARD PLUG (9)
PL9 -
PL10 - BUFFER SPEED BOARD PLUG (12)
PL11 - BUFFER MOTOR PLUG (5)
PL12 - BUFFER MOTOR VARIABLE SPEED PLUG (5)
PL13 - OIL PLATE ASSEMBLY PLUG (6)

TB1 - TERMINAL BLOCK 1 (MAIN)
TB2 - TERMINAL BLOCK 2 (10-PIN SIDE)
TB3 - TERMINAL BLOCK 3 (7-PIN SIDE)
TB4 - TERMINAL BLOCK 4 (OIL PLATE)

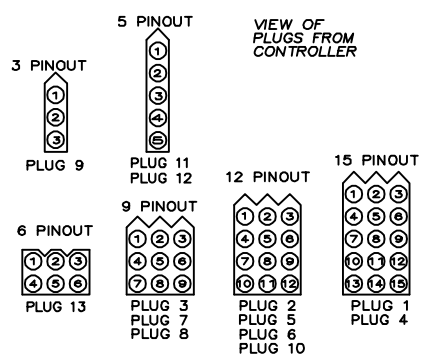


CP1 - CHARGING PLUG BATTERY (BLUE)
CP2 - CHARGING PLUG INSIDE (BLUE)
CP3 - CHARGING PLUG OUTSIDE (BLUE)
PP1 - POWER PLUG (RED)

| | | | |
|---|---|---|---|
| MATERIAL N/A | | KEGEL LLC | 1951 LONGLEAF BLVD. LAKE WALES, FL 33859 (863) 734-0200 |
| | | DESCRIPTION INPUT WIRING SCHEMATIC | |
| | | DO NOT SCALE DRAWING | |
| DRAWN BY SLS | DATE 07/23/18 | | |
| APPROVED: MP | REV DATE | SIZE C | QTY/MACHINE | PART NUMBER FLEX 2019 |
| DOC REV | | SCALE N/A | SHEET 3 OF 26 |

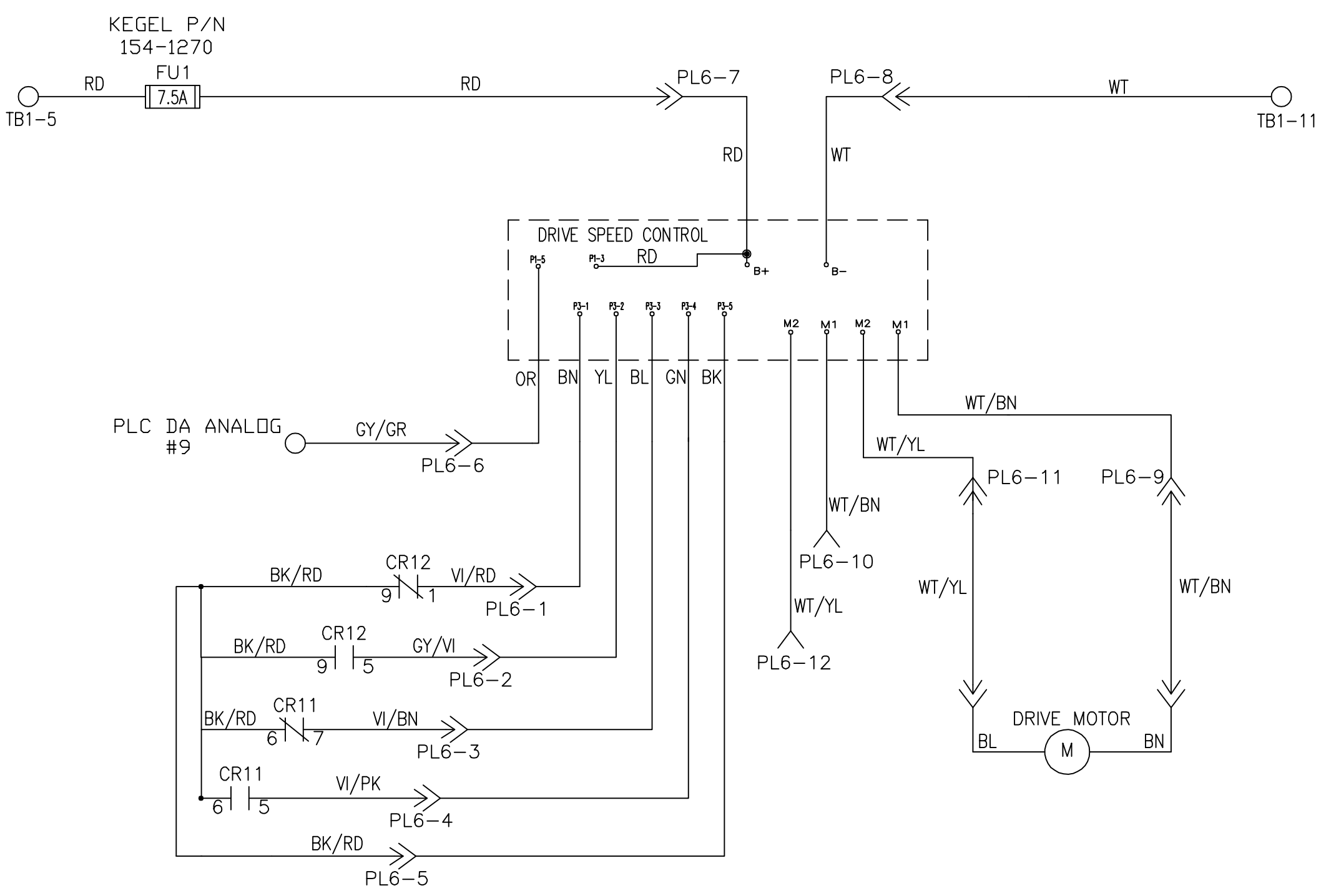


## LEGEND

CR1 - OIL VALVE RELAY TANK A
CR2 - OIL VALVE RELAY TANK B
CR3 - CONTROL RELAY
CR4 - DUSTER POLARITY SWITCH RELAY
CR5 - PIN DECK TREATMENT RELAY
CR6 - POWER OFF RELAY
CR7 - DUSTER WINDUP MOTOR RELAY
CR8 - DUSTER UNWIND MOTOR RELAY
CR9 - SQUEEGEE LIFT MOTOR RELAY
CR10 - BRUSH LIFT MOTOR RELAY
CR11 - FORWARD DRIVE MOTOR RELAY
CR12 - REVERSE DRIVE MOTOR RELAY
CR13 - BUFFER MOTOR RELAY
CR14 -
CR15 -
CR16 -
CR17 -
CR18 -
CR19 - VACUUM MOTOR RELAY
CR20 - POWER RELAY

FU1 - DRIVE MOTOR 7.5A
FU2 - BUFFER MOTOR 10A/20A
FU3 - VACUUM MOTOR 20A
FU4 - DUSTER UNWIND 3.2A
FU5 - DUSTER WINDUP 3.2A
FU6 - SQUEEGEE MOTOR 3.2A
FU7 - BRUSH LIFT MOTOR 3.2A
FU8 - HEAD DRIVE MOTOR 2.25A
FU9 - OIL PUMP MOTOR 2.25A
FU10 - PLC INPUT POWER/L1 0.5A
FU11 - PLC OUTPUT COMMON 0.5A
FU12 - TOUCH SCREEN 0.5A
FU13 - CLEANER PUMP #1 3.2A
FU14 - CLEANER PUMP #2 3.2A
FU15 - CVR POWER 25A/30A
FU16 - LED LIGHTS 1A
FU17 - TRIGGER SOLENOID 3.2A

PL1 - 10-PIN SIDE PLUG (15)
PL2 - 10-PIN SIDE PLUG (12)
PL3 - 10-PIN SIDE PLUG (9)
PL4 - 7-PIN SIDE PLUG (15)
PL5 - 7-PIN SIDE PLUG (12)
PL6 - DRIVE SPEED BOARD PLUG (12)
PL7 - CLEANER PUMP #1 SPEED BOARD PLUG (9)
PL8 - CLEANER PUMP #2 SPEED BOARD PLUG (9)
PL9 -
PL10 - BUFFER SPEED BOARD PLUG (12)
PL11 - BUFFER MOTOR PLUG (5)
PL12 - BUFFER MOTOR VARIABLE SPEED PLUG (5)
PL13 - OIL PLATE ASSEMBLY PLUG (6)

TB1 - TERMINAL BLOCK 1 (MAIN)
TB2 - TERMINAL BLOCK 2 (10-PIN SIDE)
TB3 - TERMINAL BLOCK 3 (7-PIN SIDE)
TB4 - TERMINAL BLOCK 4 (OIL PLATE)

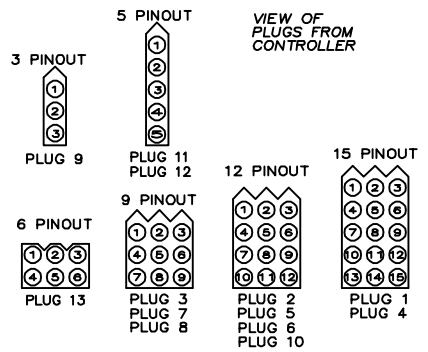


CP1 - CHARGING PLUG BATTERY (BLUE)
CP2 - CHARGING PLUG INSIDE (BLUE)
CP3 - CHARGING PLUG OUTSIDE (BLUE)
PP1 - POWER PLUG (RED)

| | | | |
|---|---|---|---|
| MATERIAL N/A | | KEGEL LLC | 1951 LONGLEAF BLVD. LAKE WALES, FL 33859 (863) 734-0200 |
| | | DESCRIPTION SPEED CONTROL SCHEMATIC | |
| | | DO NOT SCALE DRAWING | |
| DRAWN BY SLS | DATE 07/23/18 | | |
| APPROVED: MP | REV DATE | SIZE C / QTY/MACHINE N/A / PART NUMBER FLEX 2019 | |
| DOC REV | | SCALE N/A | SHEET 4 OF 26 |

# BUILT IN PLC ANALOG

## DA AD

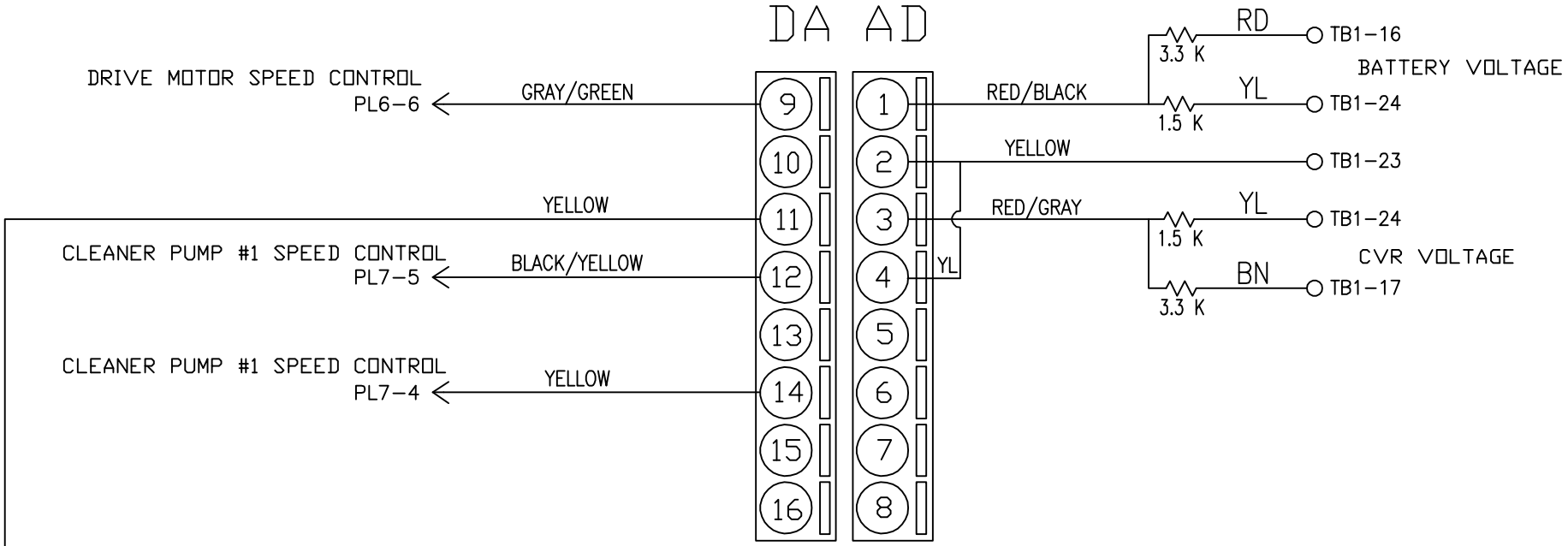


## AD021 ANALOG ADD ON UNIT

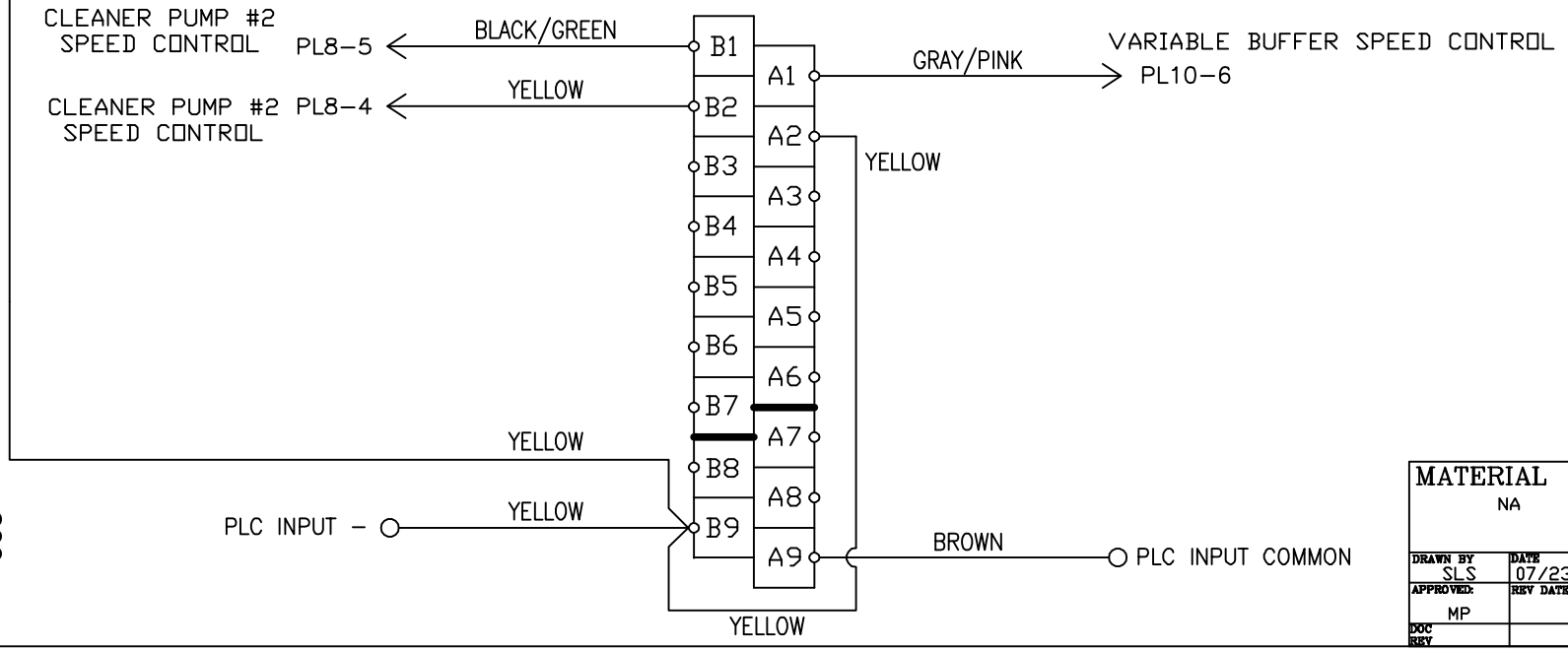


| | | | |
|---|---|---|---|
| MATERIAL: NA | | KEGEL LLC | 1951 LONGLEAF BLVD. LAKE WALES, FL 33859 (863) 734-0200 |
| | | DESCRIPTION: ANALOG WIRING SCHEMATIC | |
| DRAWN BY: SLS | DATE: 07/23/18 | DO NOT SCALE DRAWING | |
| APPROVED: MP | REV DATE: | SIZE: C | QTY/MACHINE: PART NUMBER: FLEX 2019 |
| DOC REV: | | SCALE: N/A | SHEET: 5 OF 26 |

# TB1
(MAIN)

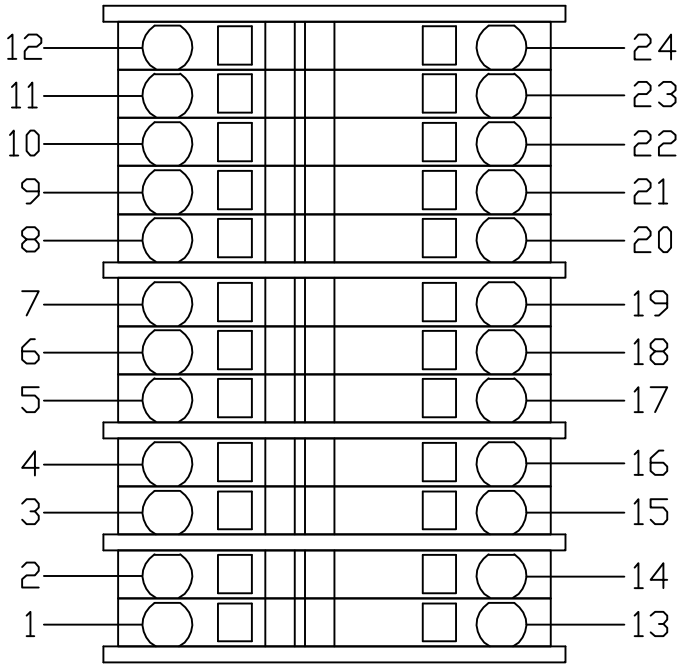


# TB2
(10-PIN SIDE)

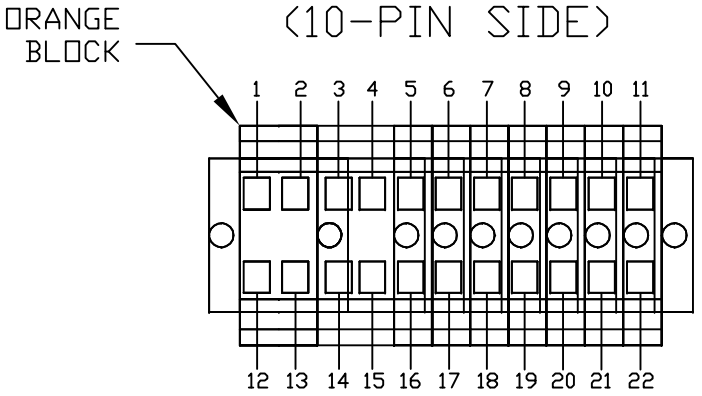


# TB3
(7-PIN SIDE)

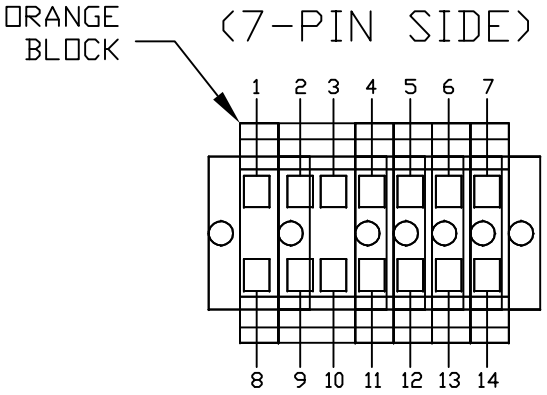


# TB4
(OIL PLATE)

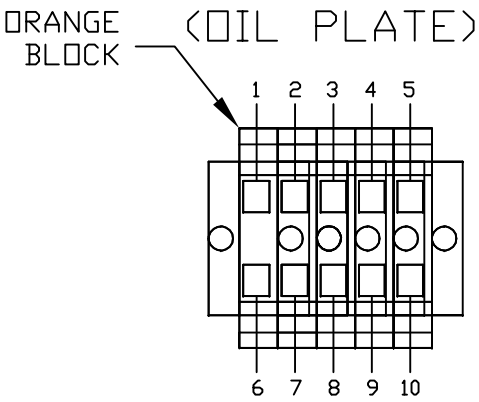


## LEGEND

TB1 - TERMINAL BLOCK 1 (MAIN)
TB2 - TERMINAL BLOCK 2 (10-PIN SIDE)
TB3 - TERMINAL BLOCK 3 (7-PIN SIDE)
TB4 - TERMINAL BLOCK 4 (OIL PLATE)



| | | | |
|---|---|---|---|
| MATERIAL: NA | | KEGEL LLC | 1951 LONGLEAF BLVD. LAKE WALES, FL 33859 (863) 734-0200 |
| | | DESCRIPTION: TERMINAL BLOCK LAYOUT | |
| DRAWN BY: SLS | DATE: 07/23/18 | DO NOT SCALE DRAWING | |
| APPROVED: MP | REV DATE: | SIZE: C / QTY/MACHINE: / PART NUMBER: FLEX 2019 | |
| DOC REV: | | SCALE: N/A | SHEET: 6 OF 26 |

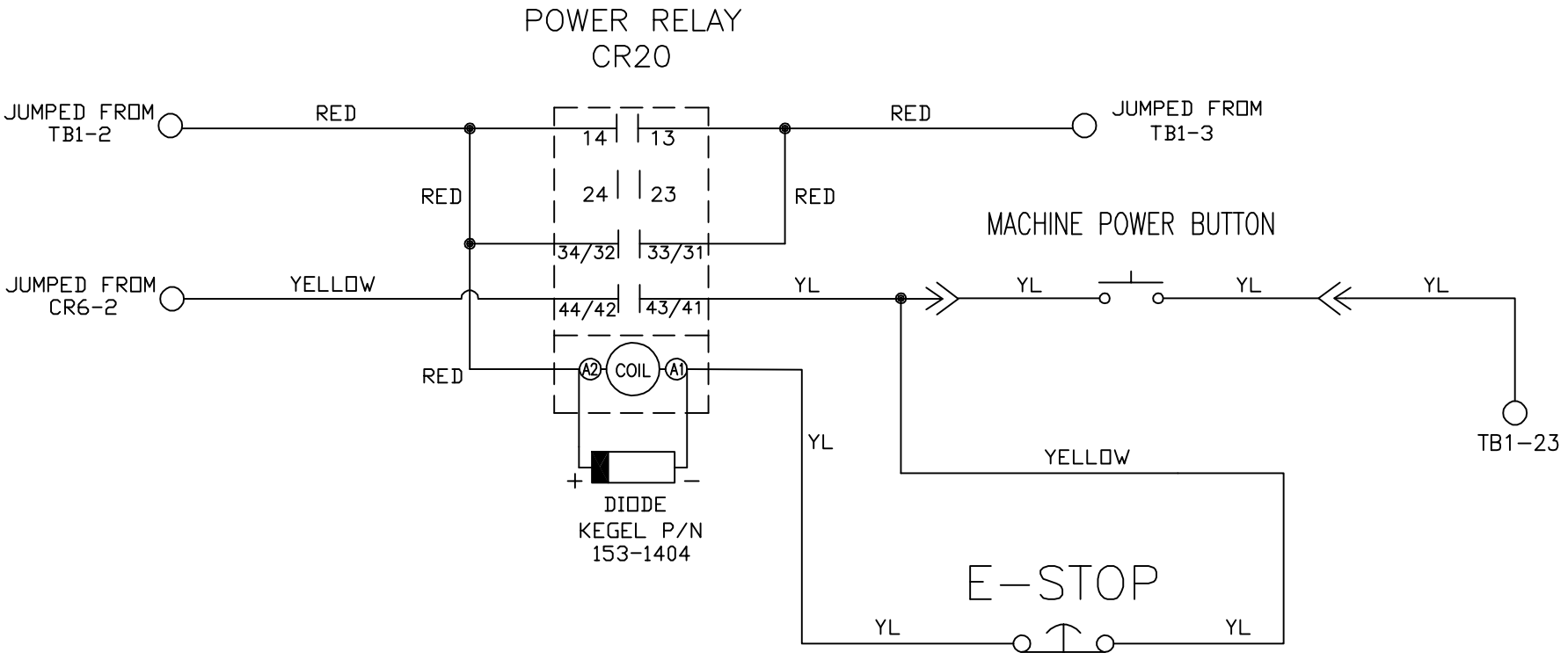


| | | | |
|---|---|---|---|
| MATERIAL: N/A | KEGEL LLC 1951 LONGLEAF BLVD. LAKE WALES, FL 33859 (863) 734-0200 | | |
| | DESCRIPTION: POWER RELAY WIRING | | |
| | DO NOT SCALE DRAWING | | |
| DRAWN BY: SLS / DATE: 07/23/18 | SIZE: A | QTY/MACHINE: N/A | PART NUMBER: FLEX 2019 |
| APPROVED: MP / REV DATE: | SCALE: N/A | SHEET: 7 OF 26 | |
| DOC REV: | | | |

# VOLTAGE REGULATOR

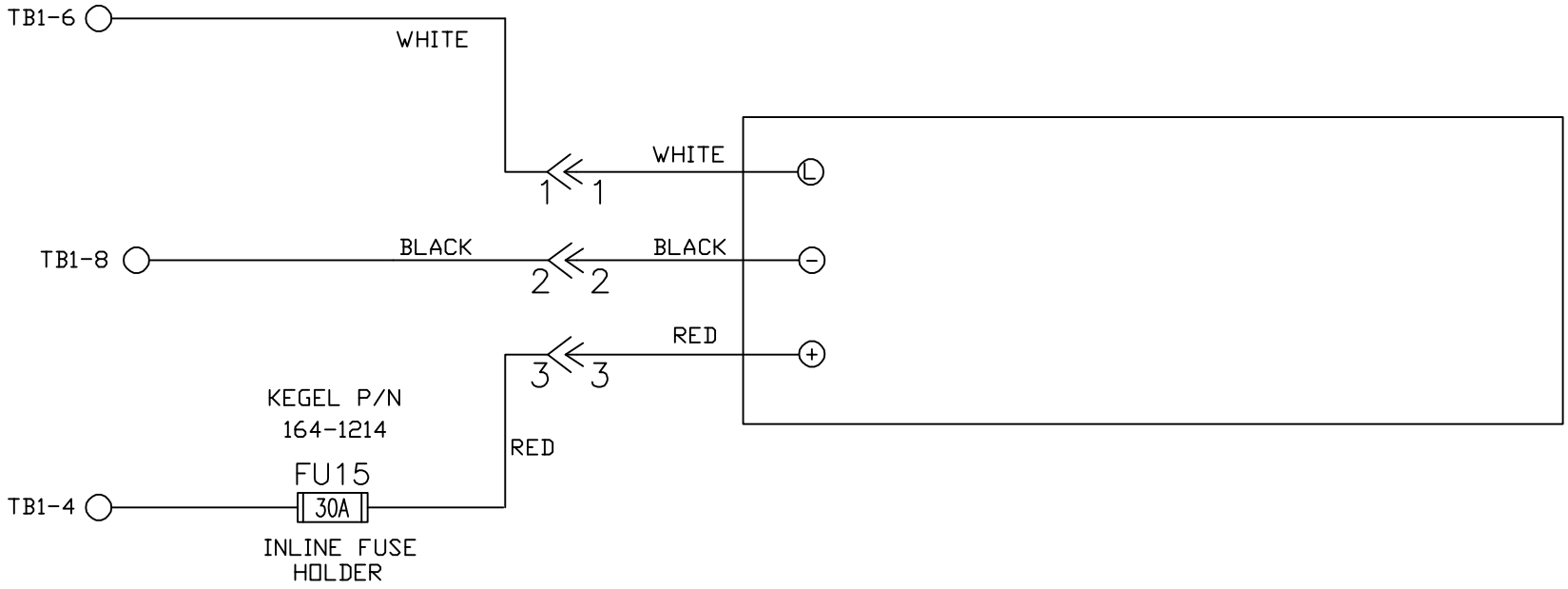


| | | | |
|---|---|---|---|
| MATERIAL: N/A | | KEGEL LLC 1951 LONGLEAF BLVD. LAKE WALES, FL 33859 (863) 734-0200 | |
| | | DESCRIPTION: VOLTAGE REGULATOR WIRING | |
| | | DO NOT SCALE DRAWING | |
| DRAWN BY: SLS | DATE: 07/23/18 | SIZE: A | QTY/MACHINE: N/A |
| APPROVED: MP | REV DATE: | PART NUMBER: FLEX 2019 | |
| DOC REV: | | SCALE: N/A | SHEET: 8 OF 26 |

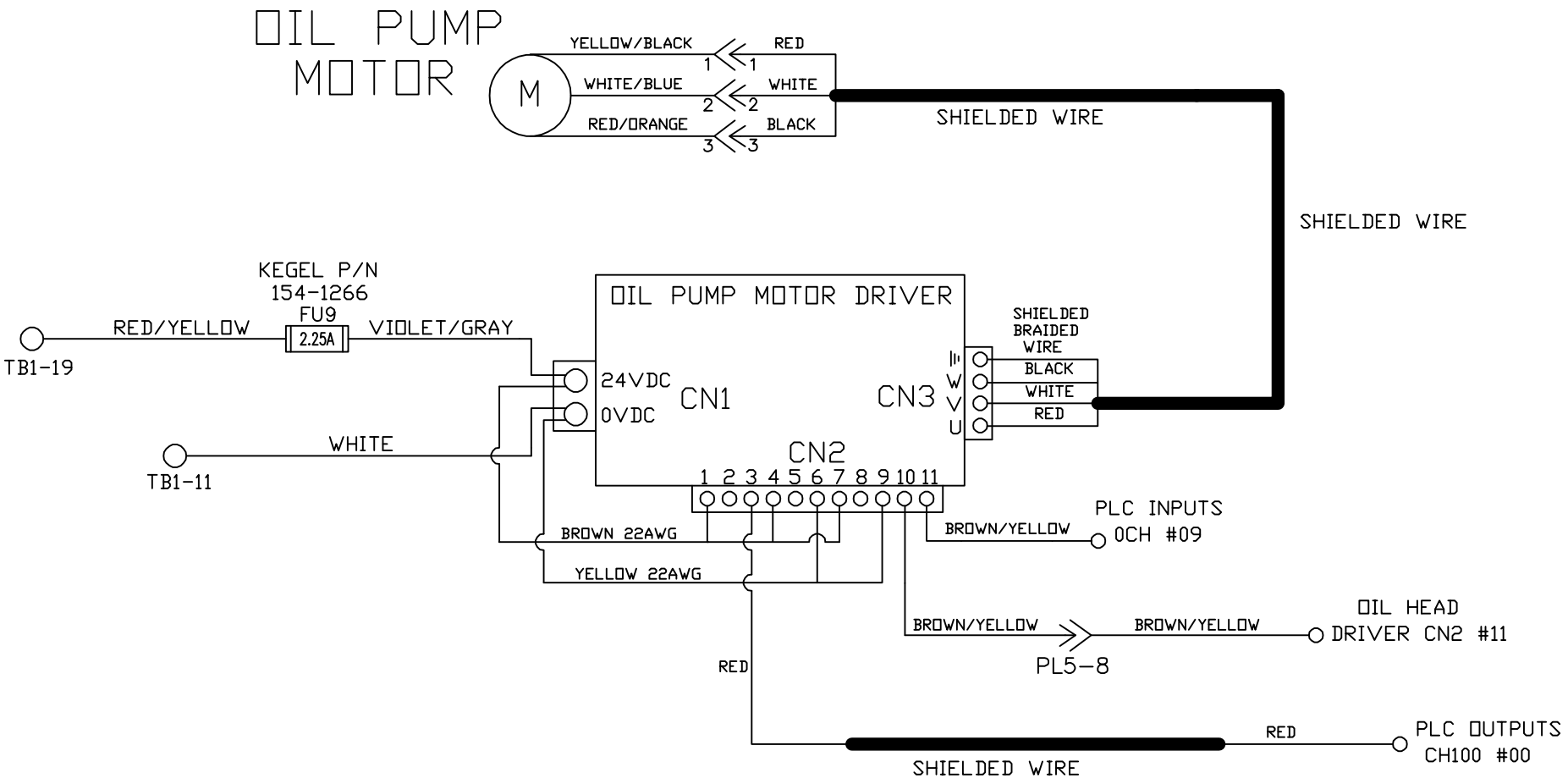


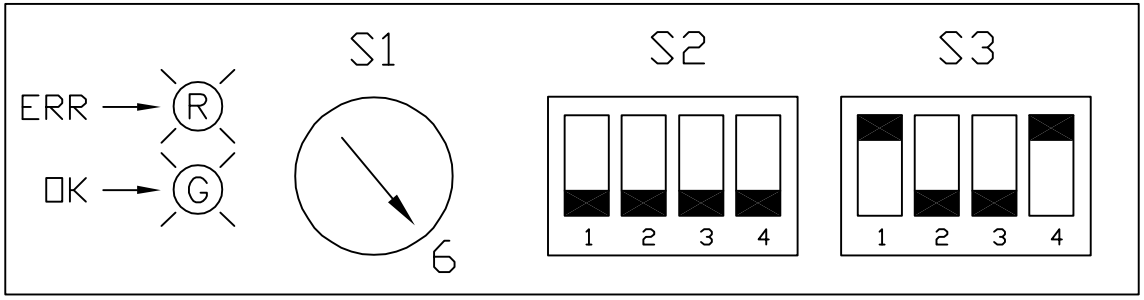


| | | | |
|---|---|---|---|
| MATERIAL N/A | | KEGEL LLC 1951 LONGLEAF BLVD. LAKE WALES, FL 33859 (863) 734-0200 | |
| | | DESCRIPTION OIL PUMP DRIVER & MOTOR WIRING | |
| DRAWN BY SLS | DATE 07/23/18 | DO NOT SCALE DRAWING | |
| APPROVED: MP | REV DATE | SIZE A / QTY/MACHINE N/A / PART NUMBER FLEX 2019 | |
| DOC REV | | SCALE N/A | SHEET 9 OF 26 |

237

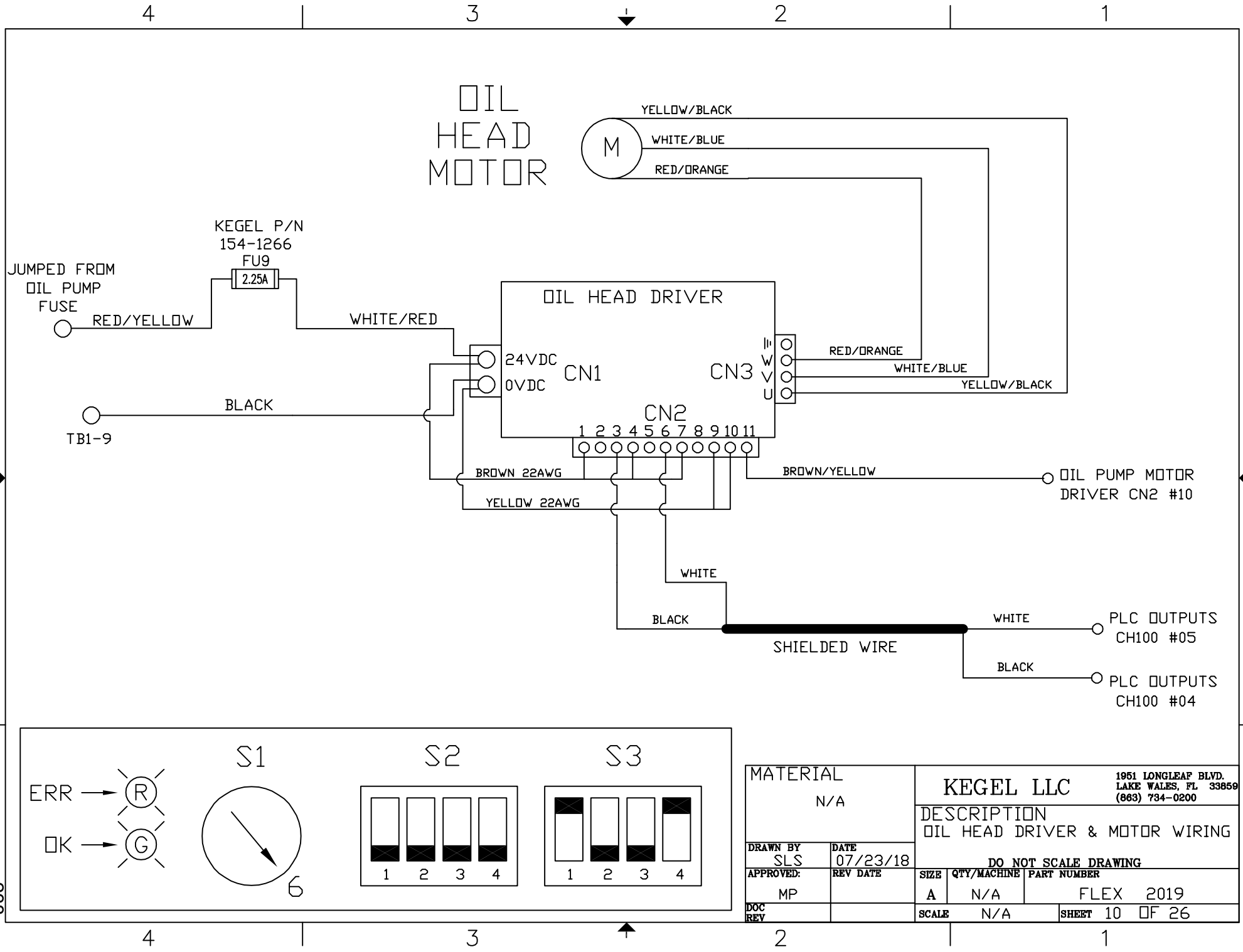


| | | | |
|---|---|---|---|
| MATERIAL: N/A | KEGEL LLC, 1951 LONGLEAF BLVD. LAKE WALES, FL 33859 (863) 734-0200 | | |
| | DESCRIPTION: OIL HEAD DRIVER & MOTOR WIRING | | |
| DRAWN BY: SLS | DATE: 07/23/18 | DO NOT SCALE DRAWING | |
| APPROVED: MP | REV DATE: | SIZE: A | QTY/MACHINE: N/A |
| DOC REV: | | SCALE: N/A | PART NUMBER: FLEX 2019 |
| | | | SHEET 10 OF 26 |

## L-R HEAD PROX

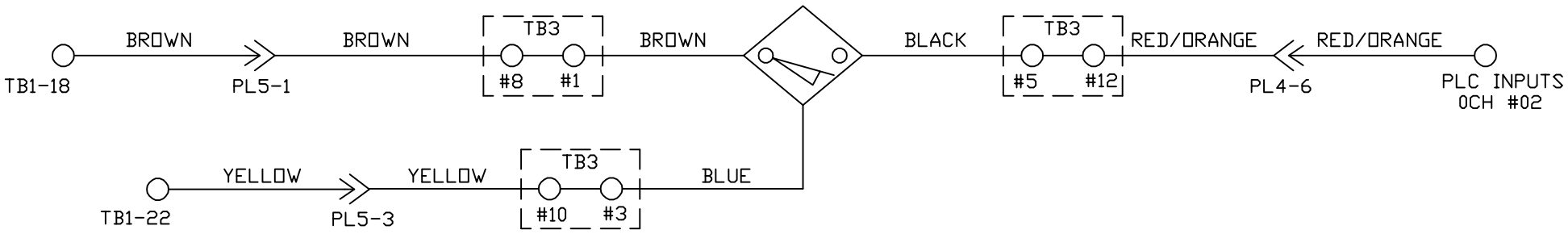


## R-L HEAD PROX

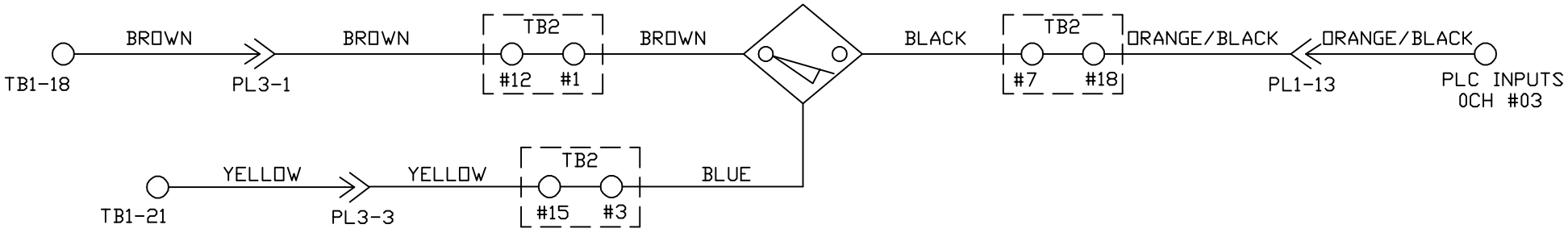


## BOARD PROX

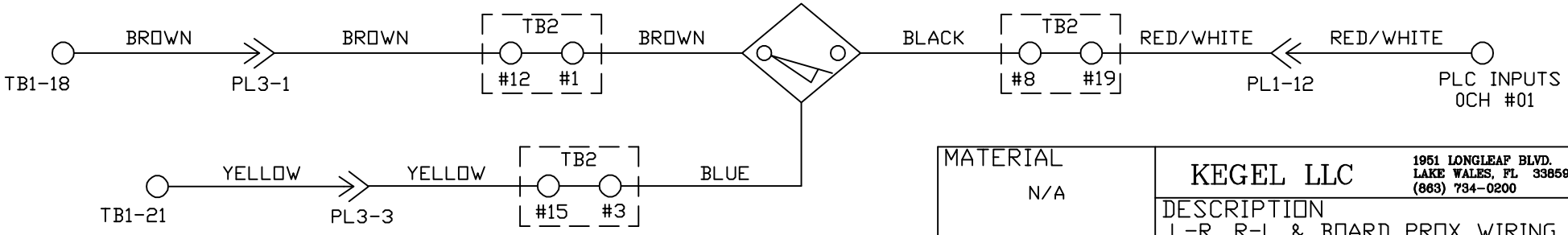


| | | | |
|---|---|---|---|
| MATERIAL: N/A | KEGEL LLC | | 1951 LONGLEAF BLVD. LAKE WALES, FL 33859 (863) 734-0200 |
| | DESCRIPTION: L-R, R-L & BOARD PROX WIRING | | |
| | DO NOT SCALE DRAWING | | |
| DRAWN BY: SLS | DATE: 07/23/18 | SIZE: A | QTY/MACHINE: N/A |
| APPROVED: MP | REV DATE: | PART NUMBER: FLEX 2019 | |
| DOC REV: | | SCALE: N/A | SHEET: 11 OF 26 |

# OIL VALVE #1 — TANK A

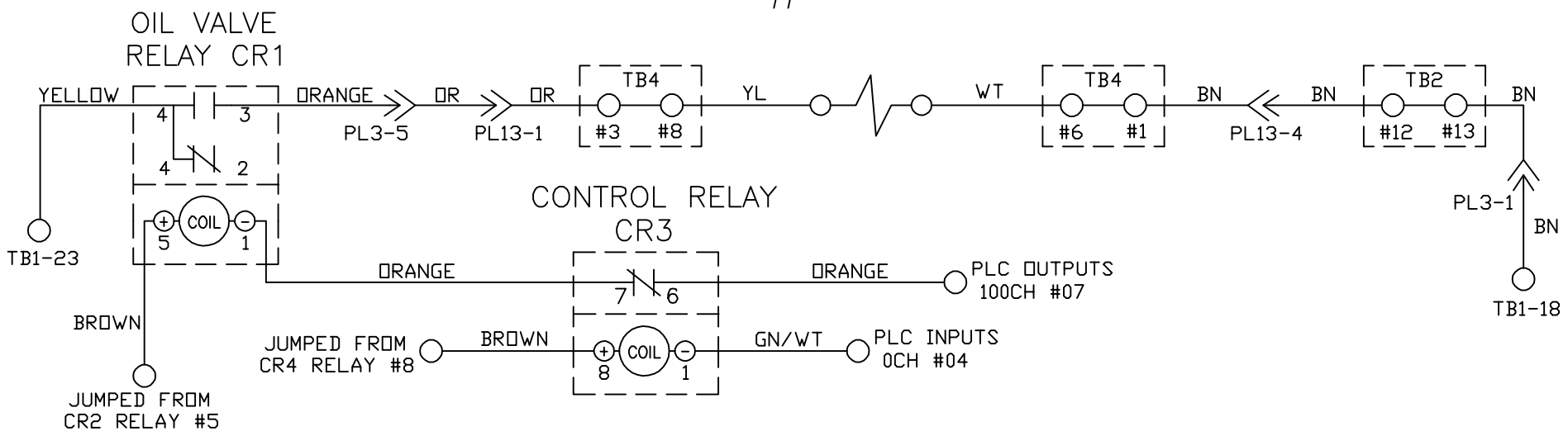


# OIL VALVE #2 — TANK B

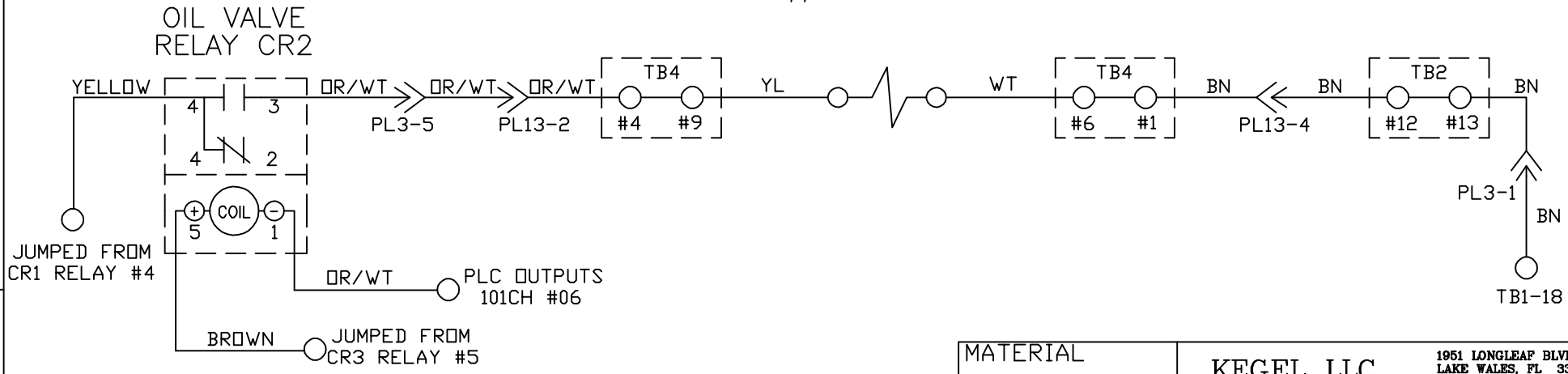


| | | | |
|---|---|---|---|
| MATERIAL | | KEGEL LLC | 1951 LONGLEAF BLVD. LAKE WALES, FL 33859 (863) 734-0200 |
| | | DESCRIPTION: OIL VALVES RELAY WIRING | |
| DRAWN BY: SLS | DATE: 07/23/18 | DO NOT SCALE DRAWING | |
| APPROVED: MP | REV DATE | SIZE: A | QTY/MACHINE: N/A |
| DOC REV | | PART NUMBER: FLEX 2019 | |
| | | SCALE: N/A | SHEET: 12 OF 26 |

240

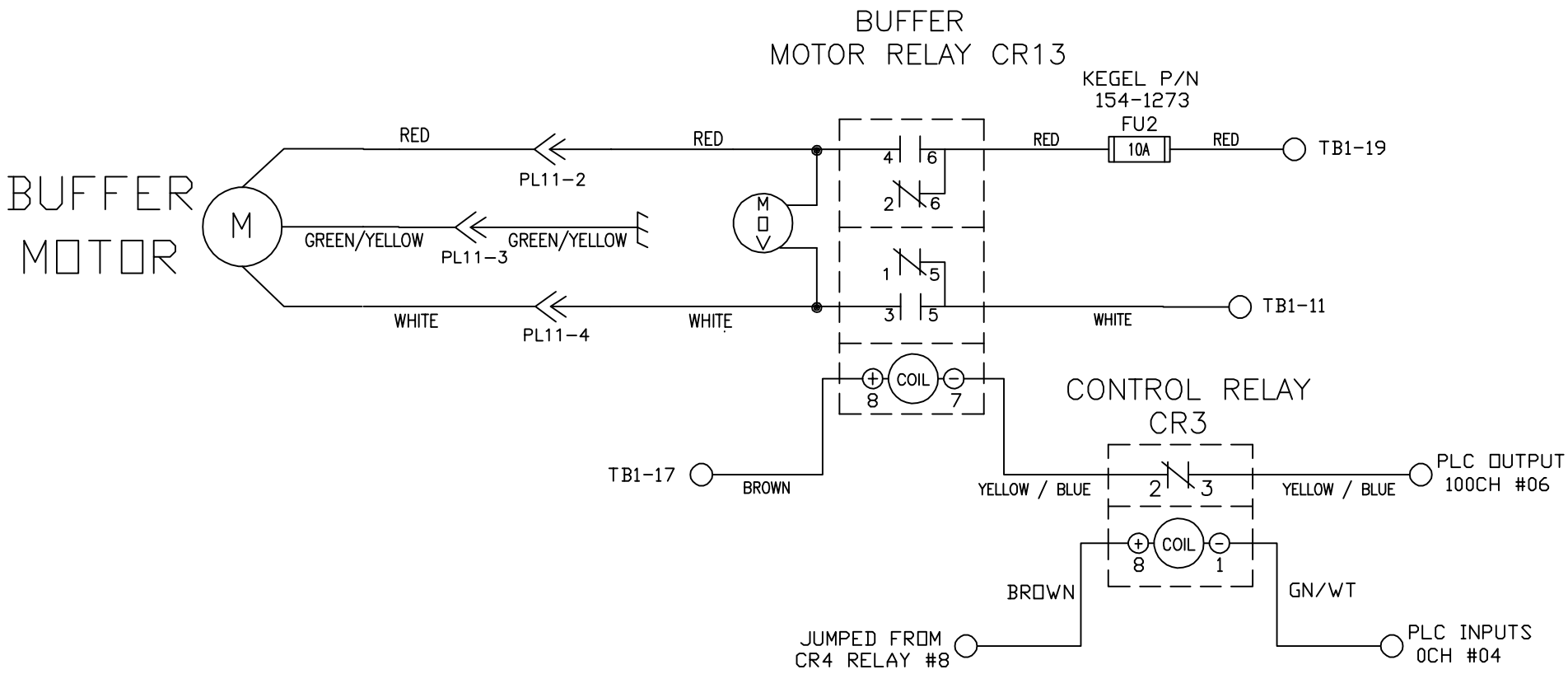


| | | | |
|---|---|---|---|
| MATERIAL: N/A | | KEGEL LLC | 1951 LONGLEAF BLVD. LAKE WALES, FL 33859 (863) 734-0200 |
| | | DESCRIPTION: BUFFER MOTOR WIRING | |
| | | DO NOT SCALE DRAWING | |
| DRAWN BY: SLS | DATE: 07/23/18 | SIZE: A | QTY/MACHINE: N/A |
| APPROVED: MP | REV DATE: | PART NUMBER: FLEX 2019 | |
| DOC REV: | | SCALE: N/A | SHEET: 13 OF 26 |

241

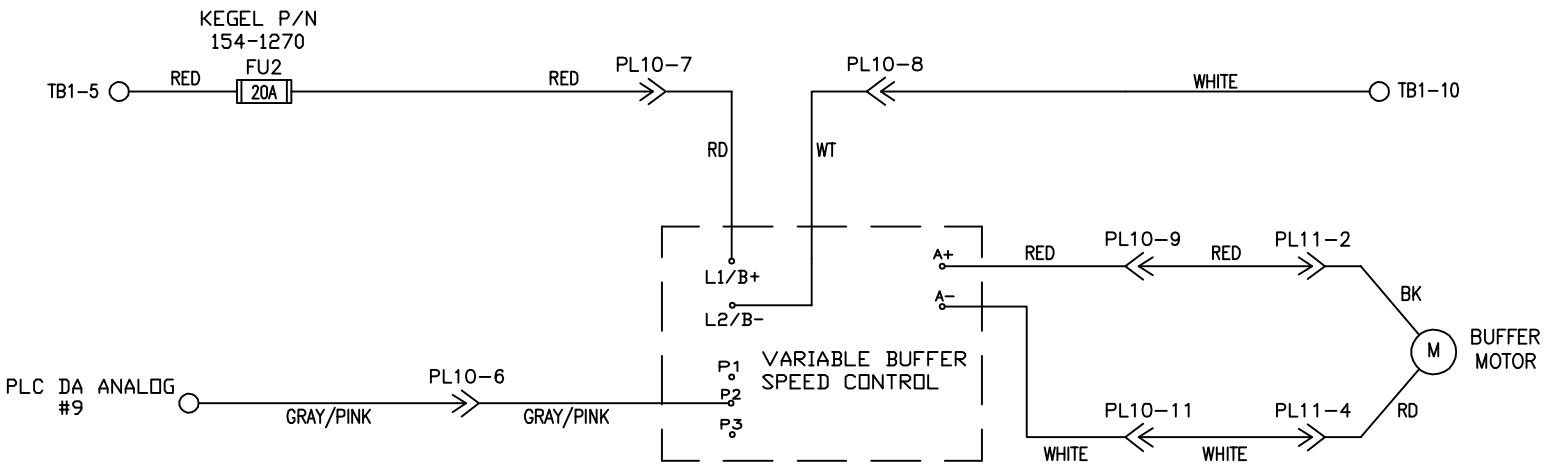


# VARIABLE BUFFER PROX

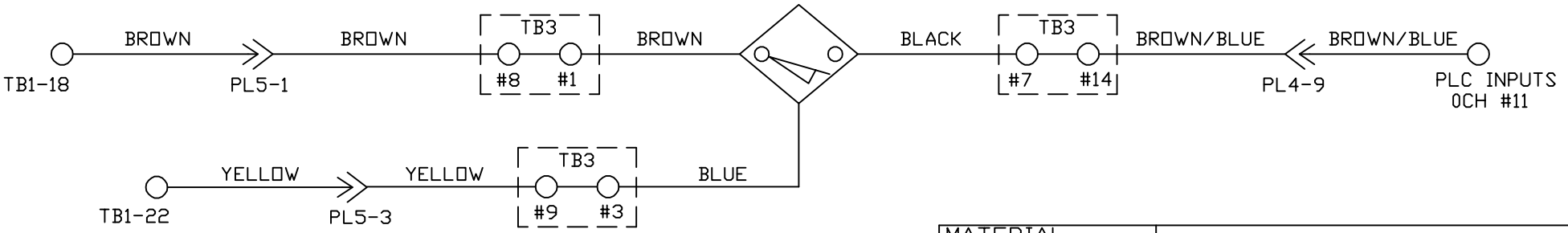


| | | | |
|---|---|---|---|
| MATERIAL: N/A | KEGEL LLC 1951 LONGLEAF BLVD. LAKE WALES, FL 33859 (863) 734-0200 | | |
| | DESCRIPTION: VARIABLE BUFFER MOTOR & TACH WIRING<br>DO NOT SCALE DRAWING | | |
| DRAWN BY: SLS | DATE: 07/23/18 | SIZE: A | QTY/MACHINE: N/A |
| APPROVED: MP | REV DATE: | PART NUMBER: FLEX 2019 | |
| DOC REV: | | SCALE: N/A | SHEET: 14 OF 26 |

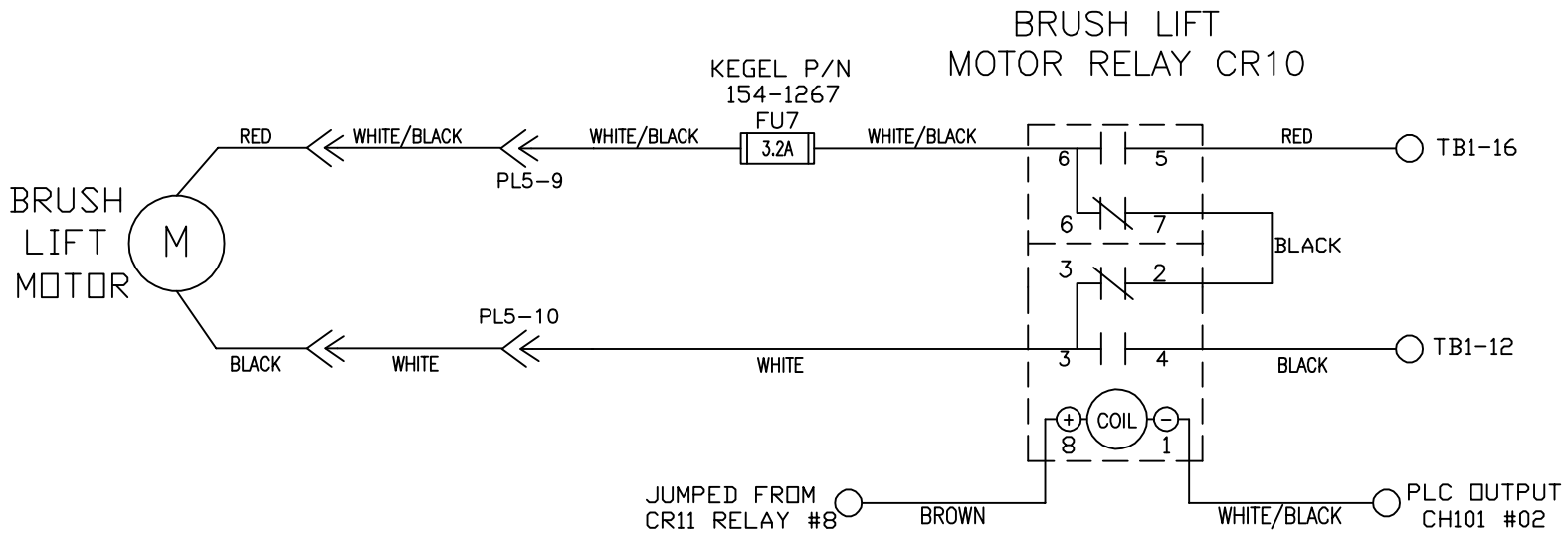


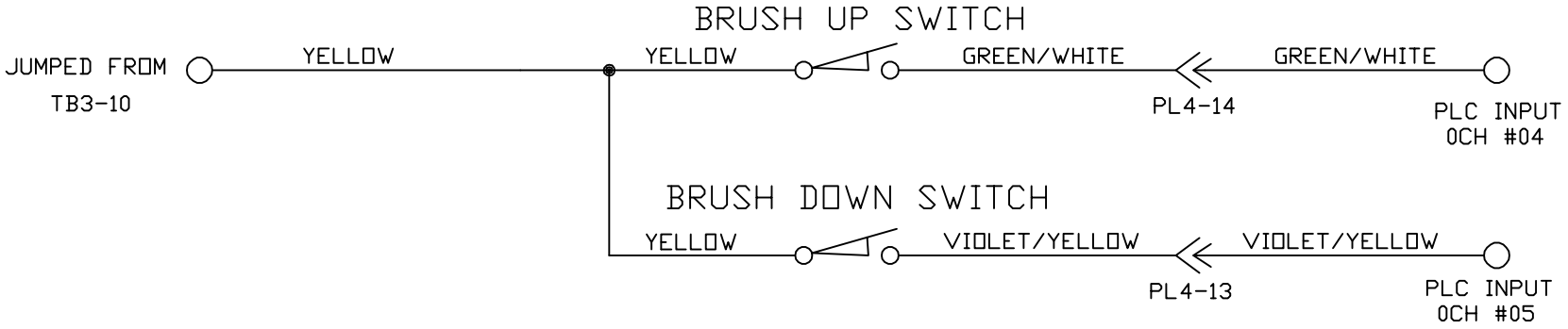


| | | | |
|---|---|---|---|
| MATERIAL: N/A | | KEGEL LLC | 1951 LONGLEAF BLVD. LAKE WALES, FL 33859 (863) 734-0200 |
| | | DESCRIPTION: BRUSH LIFT MOTOR & SWITCH WIRING<br>DO NOT SCALE DRAWING | |
| DRAWN BY: SLS | DATE: 07/23/18 | SIZE: A | QTY/MACHINE: N/A |
| APPROVED: MP | REV DATE: | PART NUMBER: FLEX 2019 | |
| DOC REV: | | SCALE: N/A | SHEET: 15 OF 26 |

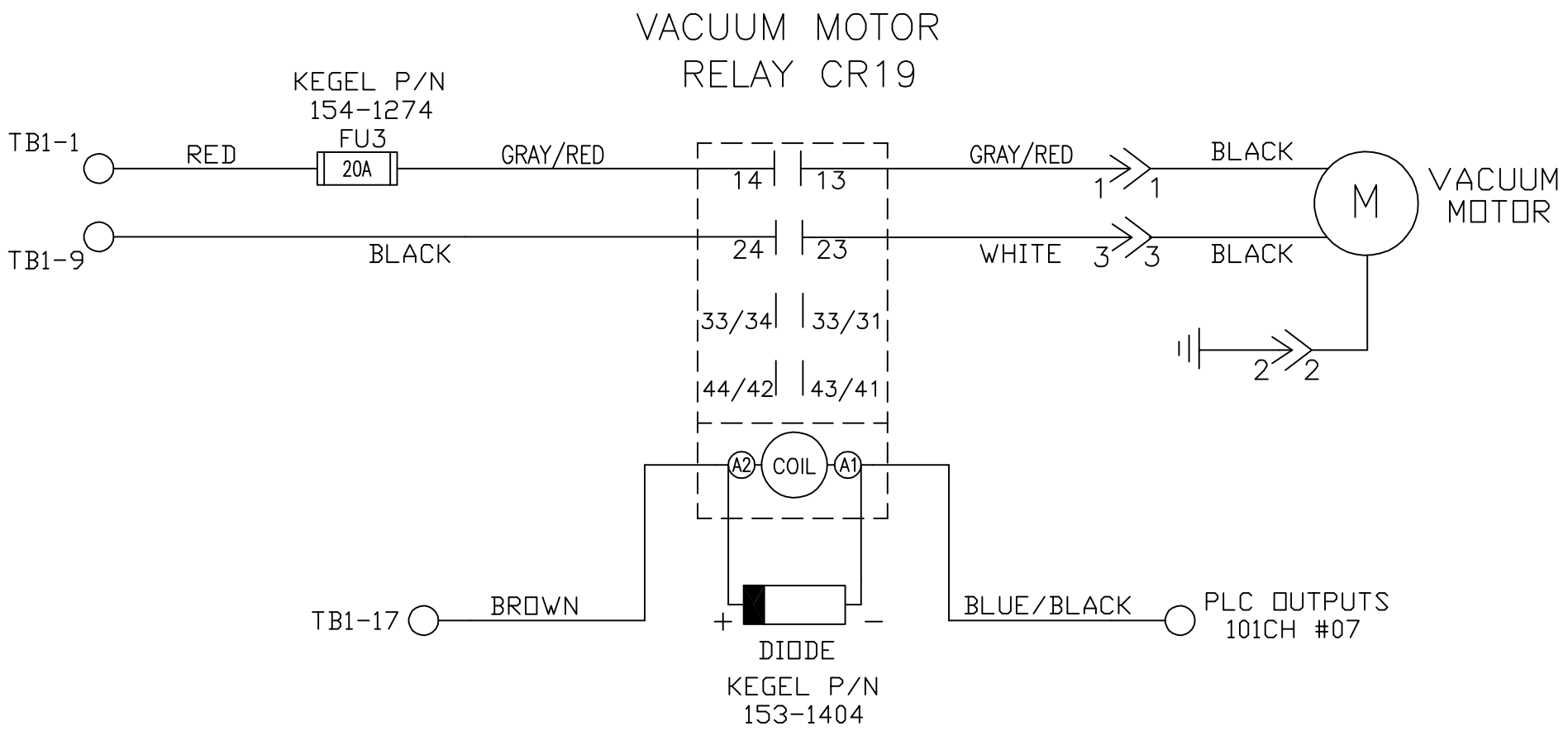


| | | | |
|---|---|---|---|
| MATERIAL: N/A | KEGEL LLC 1951 LONGLEAF BLVD. LAKE WALES, FL 33859 (863) 734-0200 | | |
| | DESCRIPTION: VACUUM MOTOR WIRING | | |
| | DO NOT SCALE DRAWING | | |
| DRAWN BY: SLS / DATE: 07/23/18 | SIZE: A | QTY/MACHINE: N/A | PART NUMBER: FLEX 2019 |
| APPROVED: MP / REV DATE: | SCALE: N/A | SHEET: 16 OF 26 | |
| DOC REV: | | | |

244

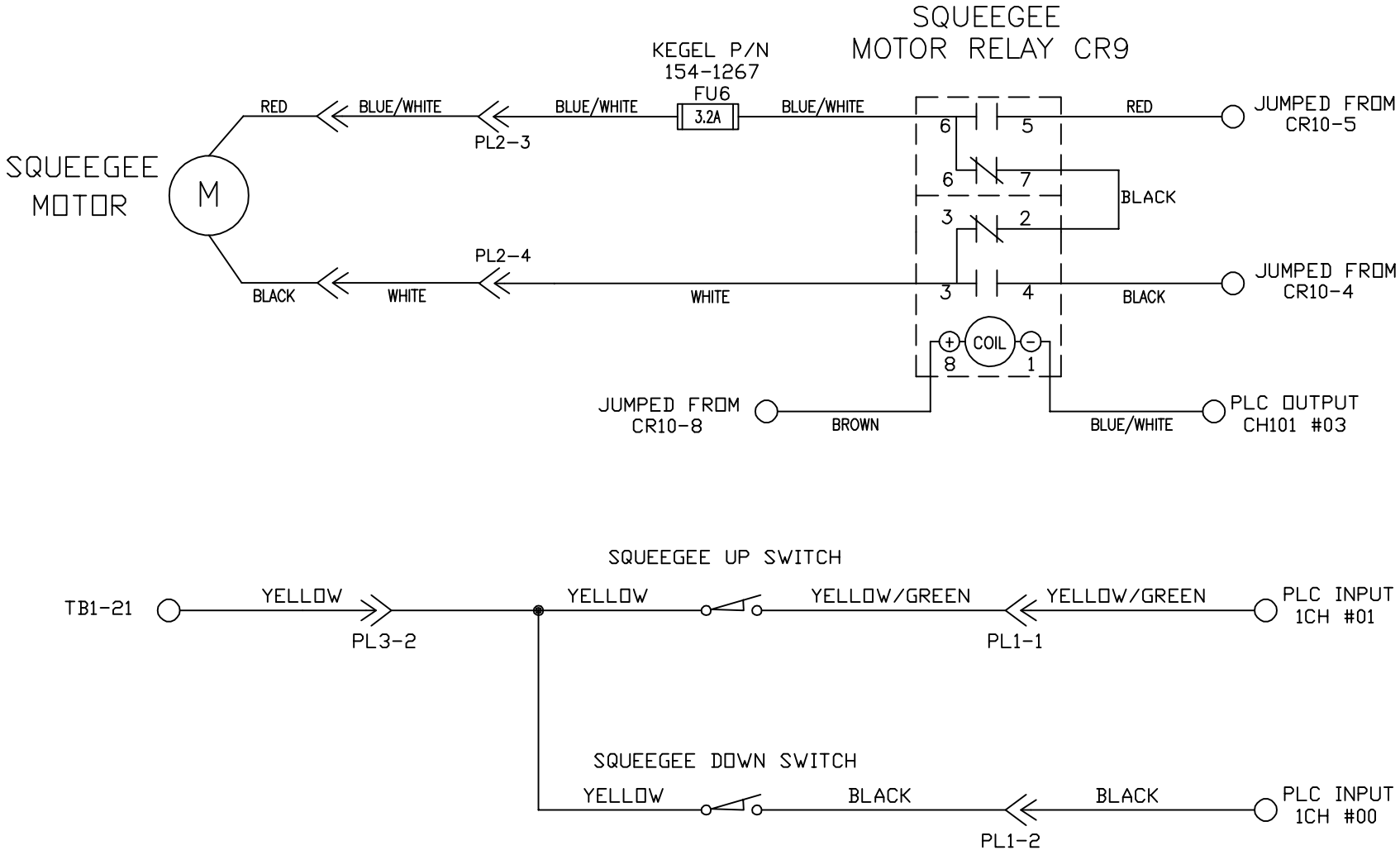


| | | | |
|---|---|---|---|
| MATERIAL: N/A | | KEGEL LLC | 1951 LONGLEAF BLVD. LAKE WALES, FL 33859 (863) 734-0200 |
| | | DESCRIPTION: SQUEEGEE MOTOR & SWITCH WIRING<br>DO NOT SCALE DRAWING | |
| DRAWN BY: SLS | DATE: 07/23/18 | SIZE: A | QTY/MACHINE: N/A |
| APPROVED: MP | REV DATE: | PART NUMBER: FLEX 2019 | |
| DOC REV: | | SCALE: N/A | SHEET: 17 OF 26 |

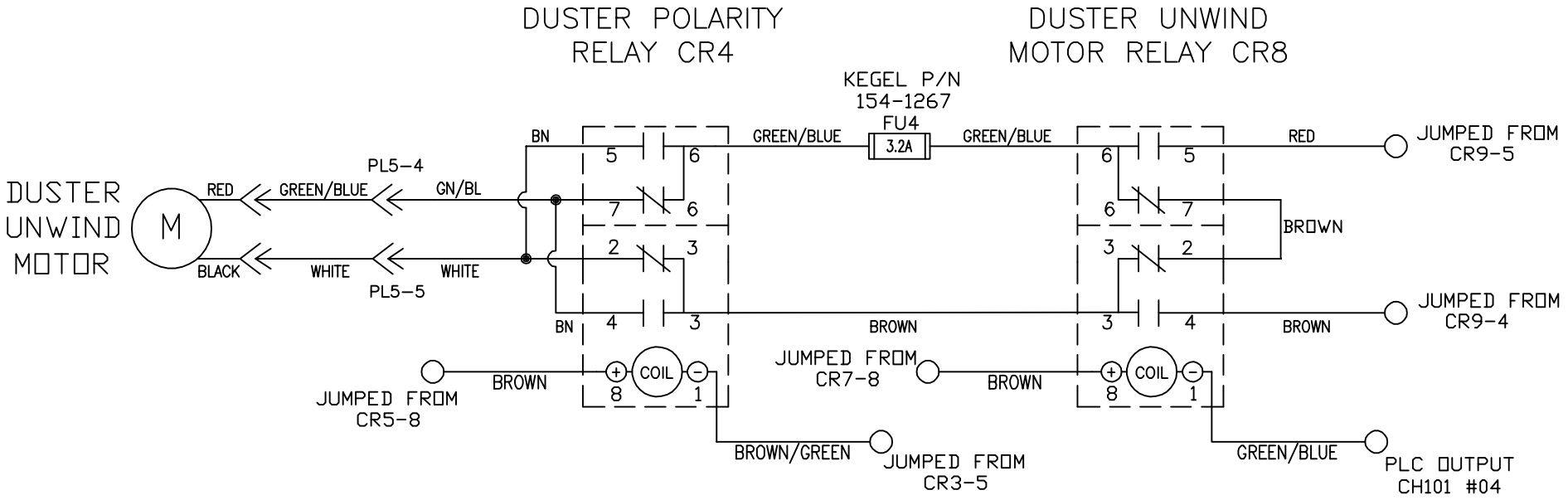


## STOP BY SENSOR

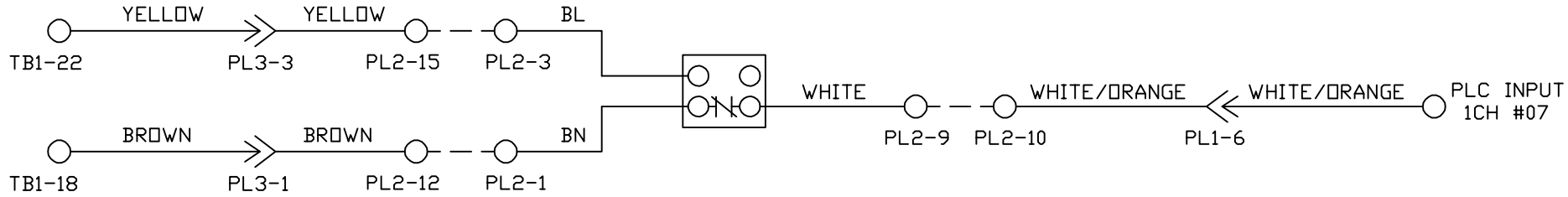


| | | | |
|---|---|---|---|
| MATERIAL: N/A | | KEGEL LLC — 1951 LONGLEAF BLVD. LAKE WALES, FL 33859 (863) 734-0200 | |
| DRAWN BY: SLS | DATE: 07/23/18 | DESCRIPTION: DUSTER UNWIND & STOP BY SENSOR WIRING — DO NOT SCALE DRAWING | |
| APPROVED: MP | REV DATE: | SIZE: A | QTY/MACHINE: N/A — PART NUMBER: FLEX 2019 |
| DOC REV: | | SCALE: N/A | SHEET: 18 OF 26 |

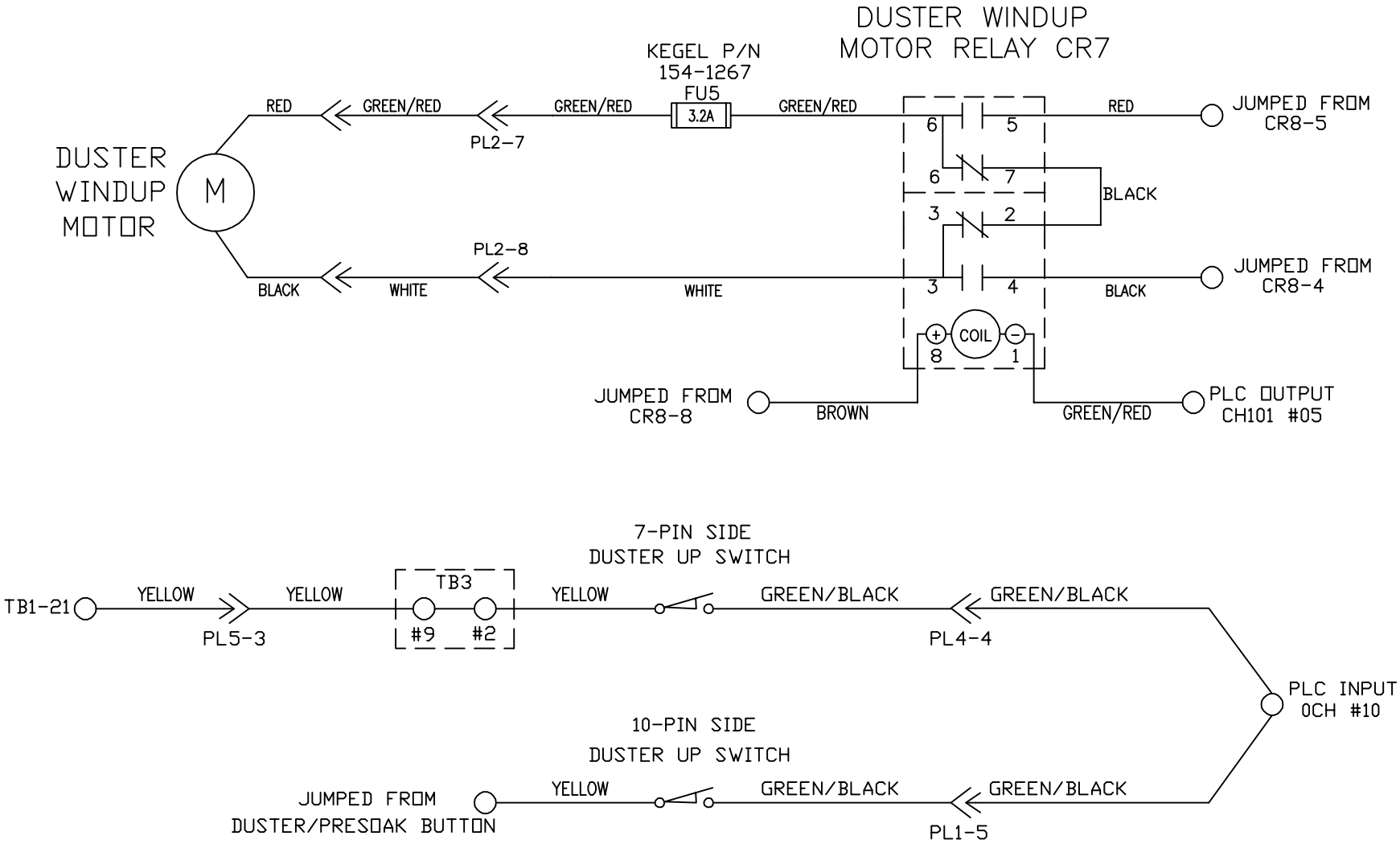


| | | | |
|---|---|---|---|
| MATERIAL: N/A | KEGEL LLC — 1951 LONGLEAF BLVD. LAKE WALES, FL 33859 (863) 734-0200 | | |
| | DESCRIPTION: DUSTER WINDUP & SWITCH WIRING — DO NOT SCALE DRAWING | | |
| DRAWN BY: SLS | DATE: 07/23/18 | SIZE: A | QTY/MACHINE: N/A |
| APPROVED: MP | REV DATE: | PART NUMBER: FLEX 2019 | |
| DOC REV: | | SCALE: N/A | SHEET: 19 OF 26 |

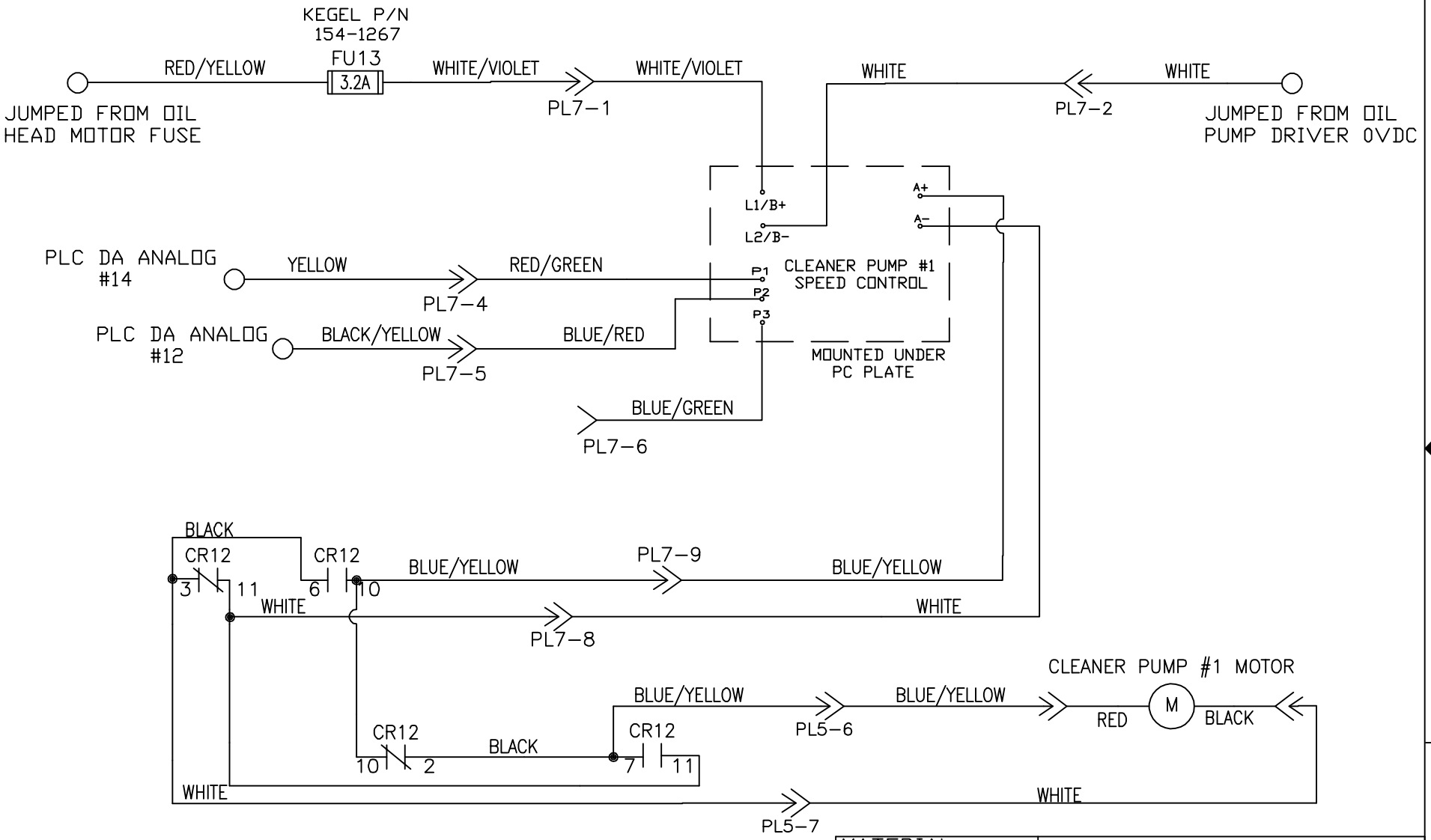


| | | | |
|---|---|---|---|
| MATERIAL: N/A | KEGEL LLC — 1951 LONGLEAF BLVD. LAKE WALES, FL 33859 (863) 734-0200 | | |
| | DESCRIPTION: CLEANER PUMP # 1 SPEED CONTROL WIRING — DO NOT SCALE DRAWING | | |
| DRAWN BY: SLS | DATE: 07/23/18 | SIZE: A | QTY/MACHINE: N/A |
| APPROVED: MP | REV DATE: | PART NUMBER: FLEX 2019 | |
| DOC REV: | | SCALE: N/A | SHEET: 20 OF 26 |

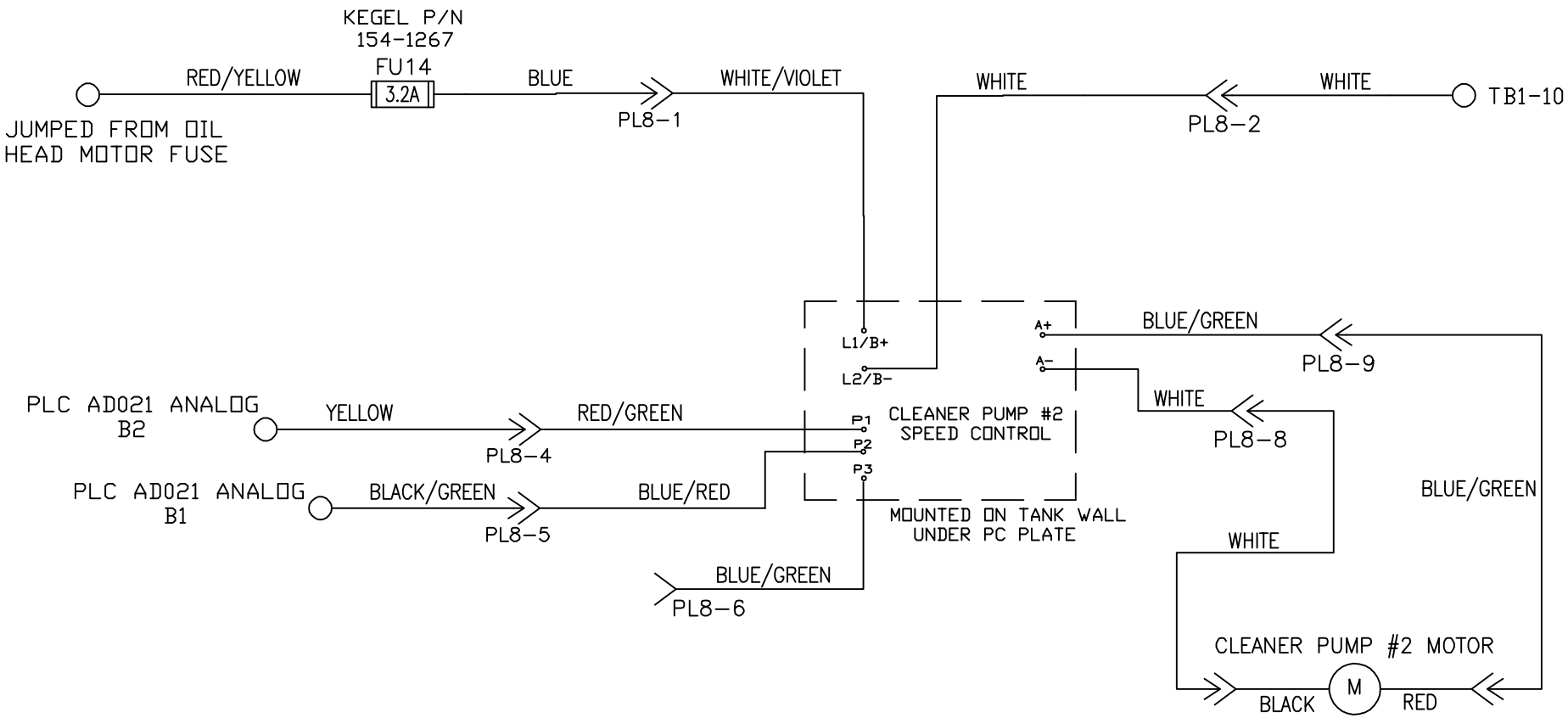


| | | | |
|---|---|---|---|
| MATERIAL: N/A | KEGEL LLC — 1951 LONGLEAF BLVD. LAKE WALES, FL 33859 (863) 734-0200 | | |
| | DESCRIPTION: CLEANER PUMP # 2 SPEED CONTROL WIRING — DO NOT SCALE DRAWING | | |
| DRAWN BY: SLS | DATE: 07/23/18 | SIZE: A | QTY/MACHINE: N/A |
| APPROVED: MP | REV DATE: | PART NUMBER: FLEX 2019 | |
| DOC REV: | | SCALE: N/A | SHEET: 21 OF 26 |

# START BUTTON

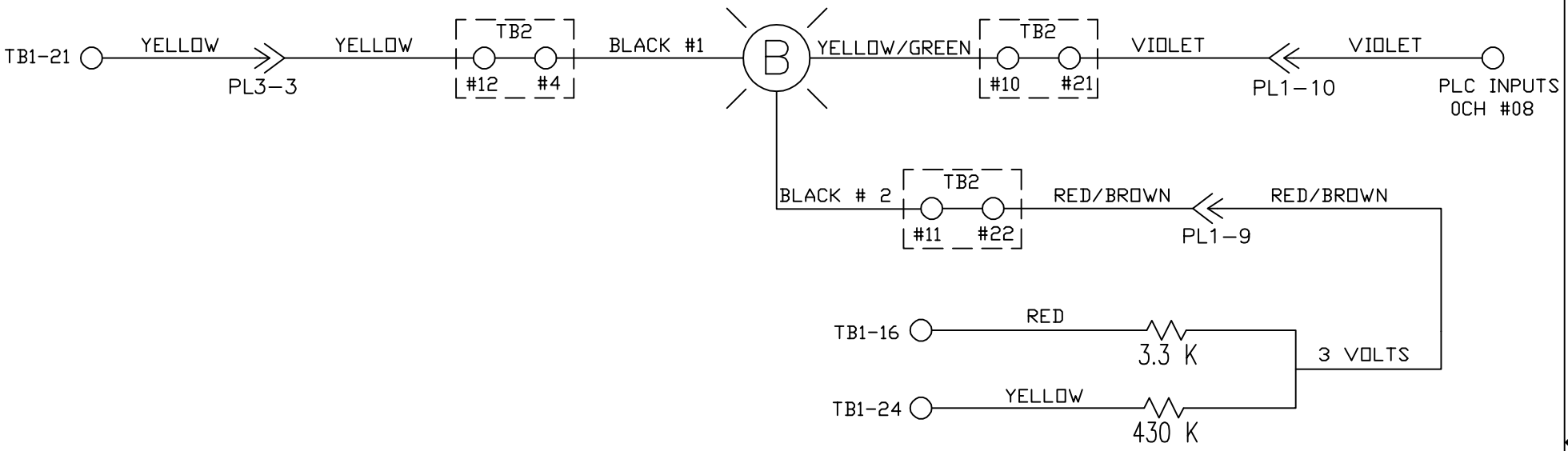


# DUSTER/PRESOAK BUTTON

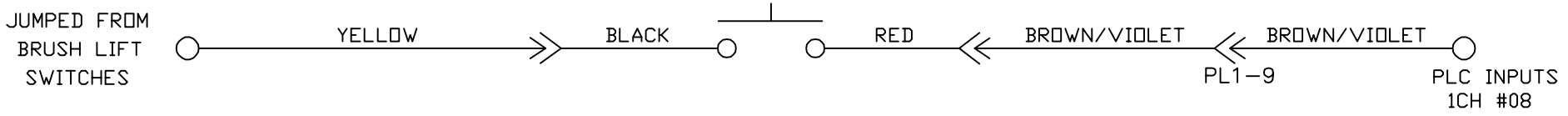


| | | | |
|---|---|---|---|
| MATERIAL: N/A | | KEGEL LLC | 1951 LONGLEAF BLVD. LAKE WALES, FL 33859 (863) 734-0200 |
| | | DESCRIPTION: START BUTTON & DUSTER/PRESOAK BUTTON DO NOT SCALE DRAWING | |
| DRAWN BY: SLS | DATE: 07/23/18 | SIZE: A | QTY/MACHINE: N/A |
| APPROVED: MP | REV DATE: | PART NUMBER: FLEX 2019 | |
| DOC REV: | | SCALE: N/A | SHEET: 22 OF 26 |

250

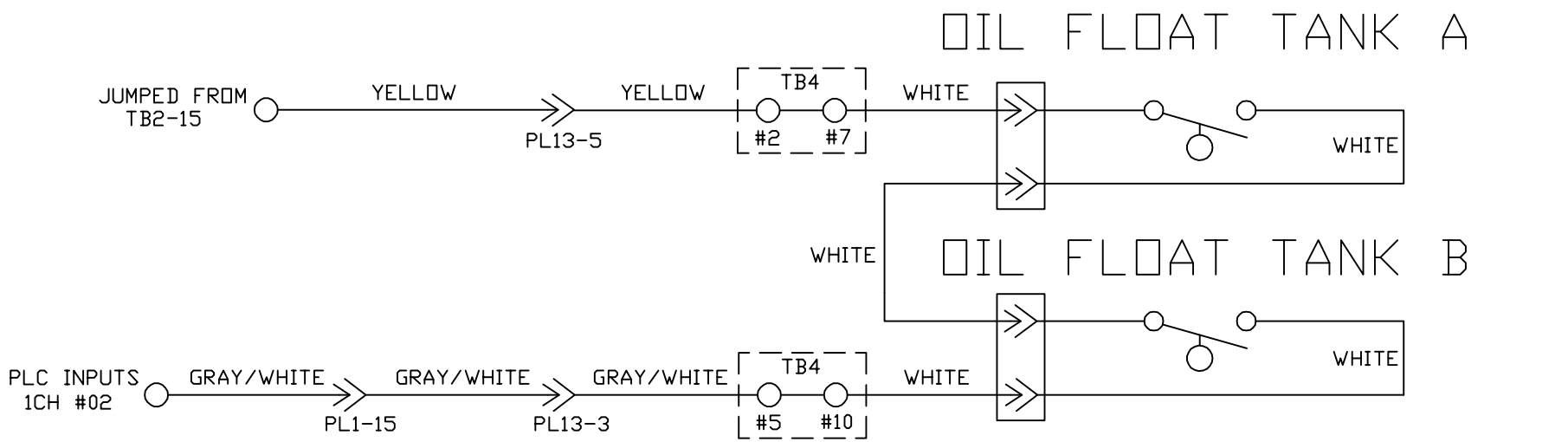


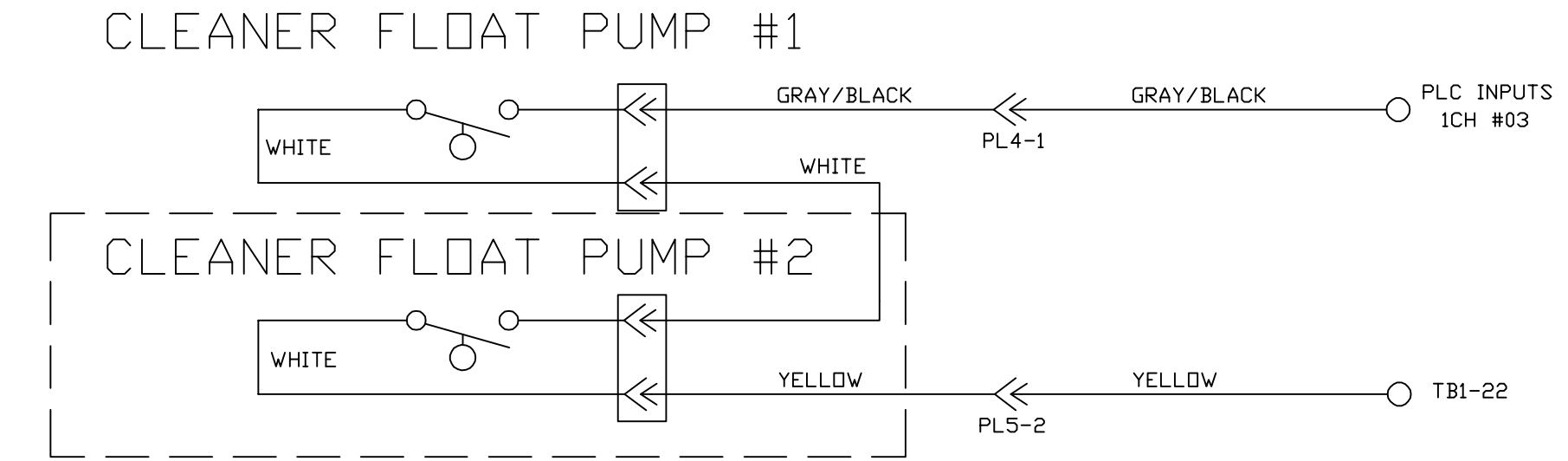


| | | | |
|---|---|---|---|
| MATERIAL: N/A | | KEGEL LLC | 1951 LONGLEAF BLVD. LAKE WALES, FL 33859 (863) 734-0200 |
| | | DESCRIPTION: OIL FLOATS & CLEANER FLOATS WIRING<br>DO NOT SCALE DRAWING | |
| DRAWN BY: SLS | DATE: 07/23/18 | SIZE: A | QTY/MACHINE: N/A |
| APPROVED: MP | REV DATE: | PART NUMBER: FLEX 2019 | |
| DOC REV: | | SCALE: N/A | SHEET: 23 OF 26 |

251

# SPEED TACH PROX

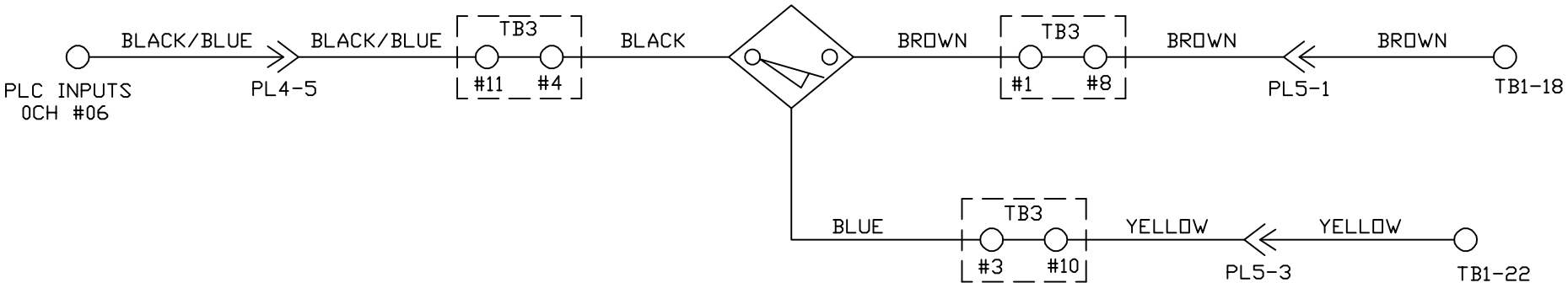


# LANE DISTANCE PROX

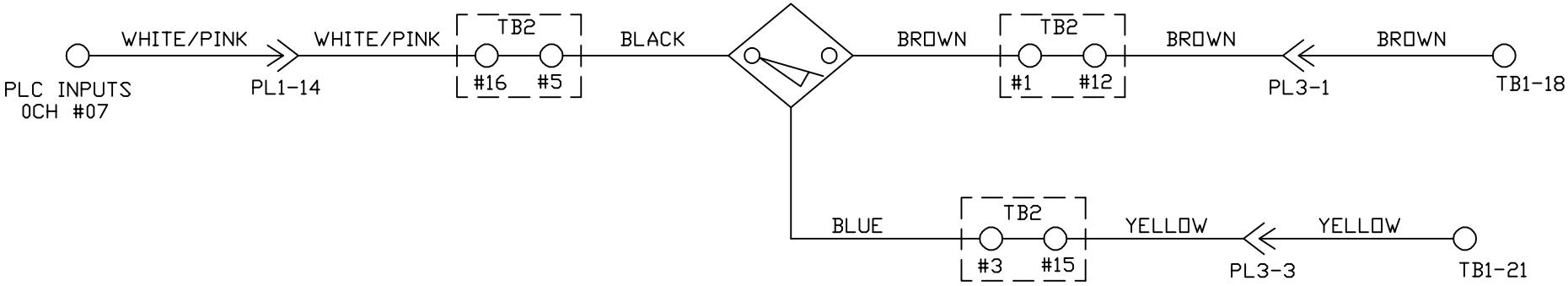


| | | | |
|---|---|---|---|
| MATERIAL: N/A | | KEGEL LLC | 1951 LONGLEAF BLVD. LAKE WALES, FL 33859 (863) 734-0200 |
| | | DESCRIPTION: SPEED TACH & LANE DISTANCE WIRING DO NOT SCALE DRAWING | |
| DRAWN BY: SLS | DATE: 07/23/18 | | |
| APPROVED: MP | REV DATE: | SIZE: A | QTY/MACHINE: N/A |
| DOC REV: | | PART NUMBER: FLEX 2019 | |
| | | SCALE: N/A | SHEET: 24 OF 26 |

252

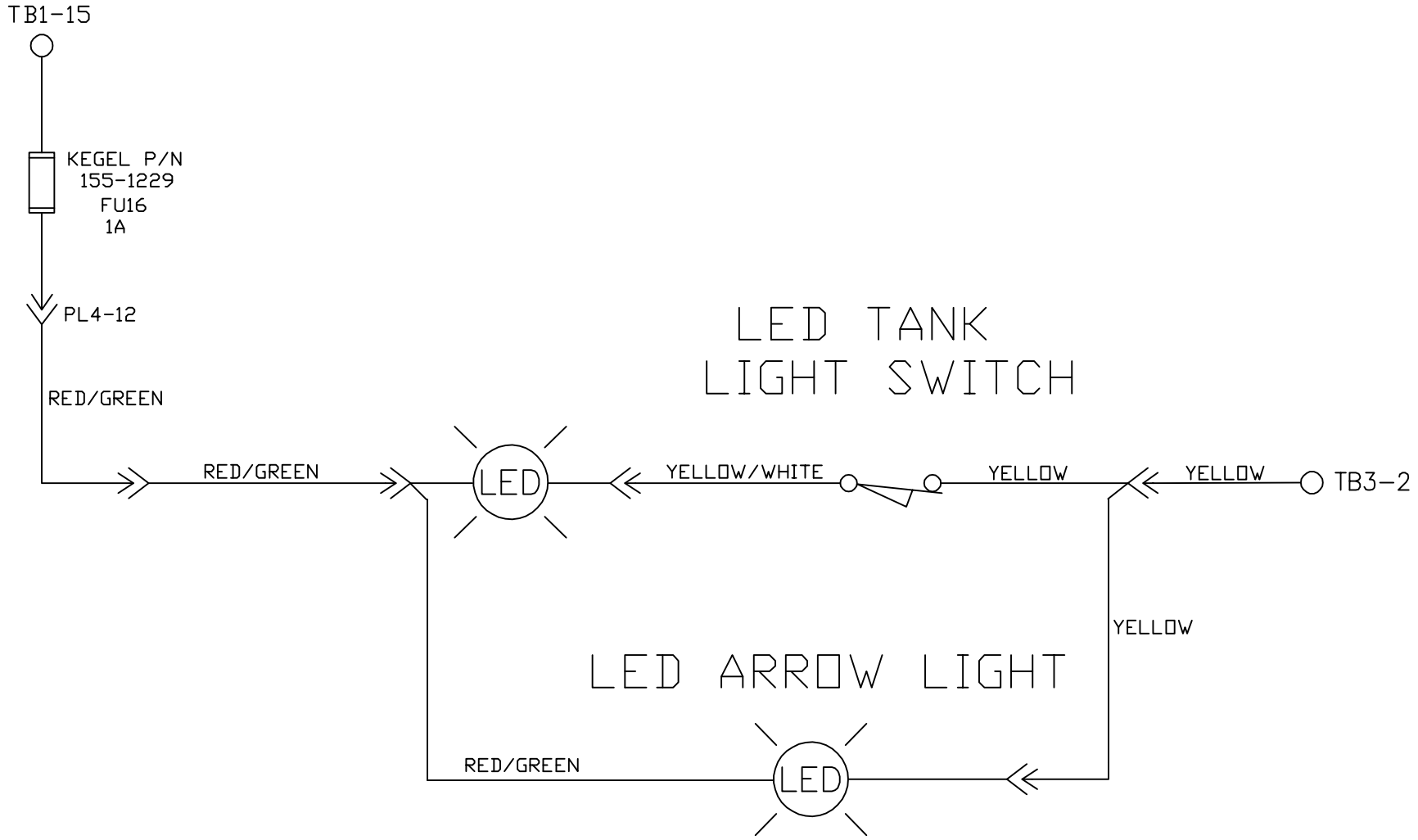


| | | | |
|---|---|---|---|
| MATERIAL: N/A | | KEGEL LLC | 1951 LONGLEAF BLVD. LAKE WALES, FL 33859 (863) 734-0200 |
| | | DESCRIPTION: LED TANK LIGHT WIRING | |
| DRAWN BY: SLS | DATE: 07/23/18 | DO NOT SCALE DRAWING | |
| APPROVED: MP | REV DATE: | SIZE: A | QTY/MACHINE: N/A |
| DOC REV: | | SCALE: N/A | PART NUMBER: FLEX 2019 |
| | | | SHEET: 25 OF 26 |

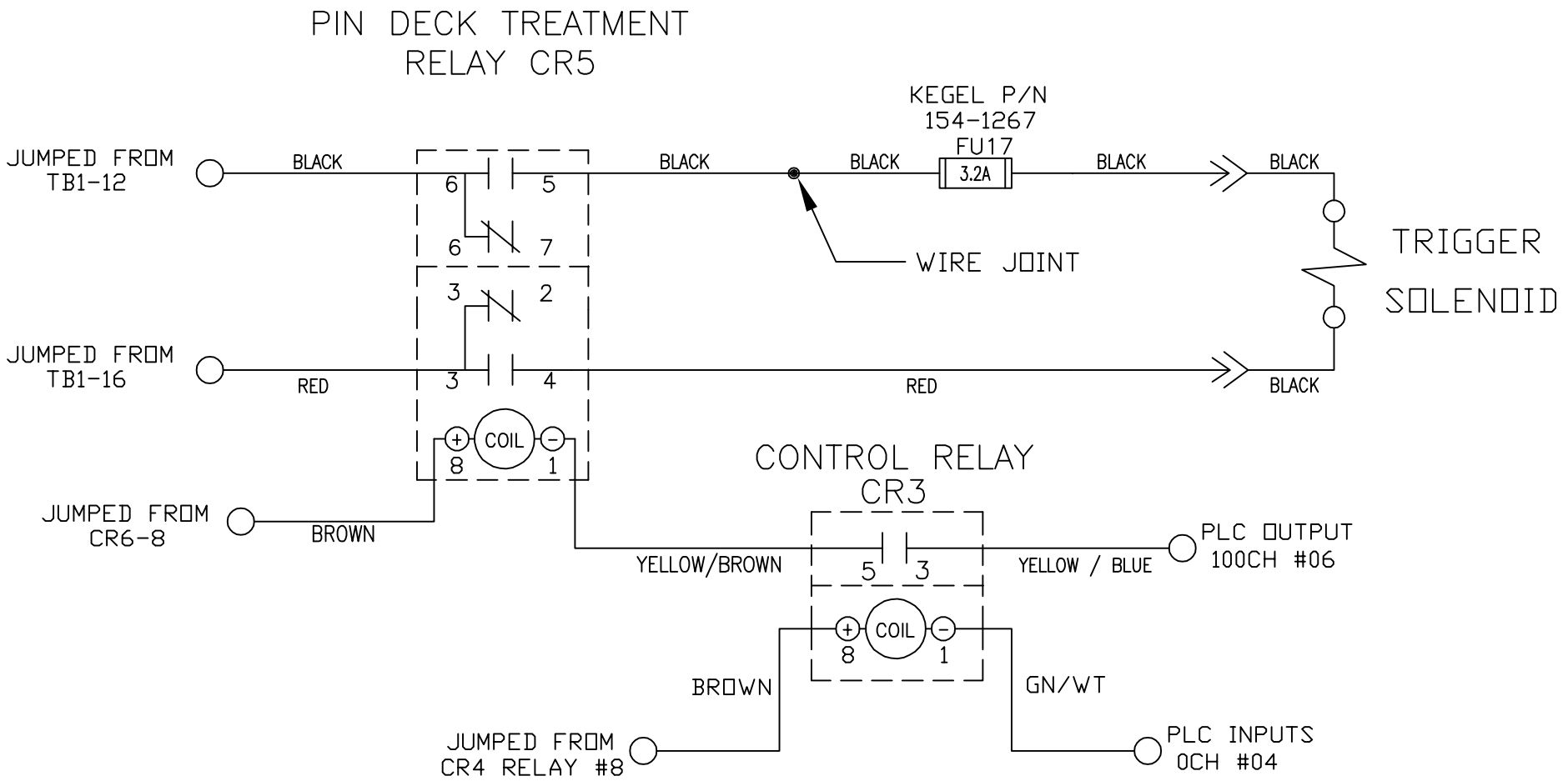


| | | | |
|---|---|---|---|
| MATERIAL: N/A | KEGEL LLC — 1951 LONGLEAF BLVD. LAKE WALES, FL 33859 (863) 734-0200 | | |
| | DESCRIPTION: TRIGGER SOLENOID WIRING | | |
| | DO NOT SCALE DRAWING | | |
| DRAWN BY: SLS | DATE: 07/23/18 | SIZE: A | QTY/MACHINE: N/A |
| APPROVED: MP | REV DATE: | PART NUMBER: FLEX 2019 | |
| DOC REV: | | SCALE: N/A | SHEET: 26 OF 26 |

# FLEX WALKER ELECTRICAL DRAWING

The following diagrams show wiring schematics for the Kustodian Walker. Detailed diagrams for the Ion follow this section. If you have any questions, please call 863-734-0200 or email tech@kegel.net .


Flex Walker Motor Wiring Layout....251
Flex Walker Output Wiring Layout....252
Flex Walker Input Wiring Layout....253
Flex Walker Speed Control Wiring Layout....254
Flex Walker Analog Wiring Layout....255
Flex Walker Terminal Block Wiring Layout....256
Flex Walker Power Wiring Layout....257
Flex Walker Voltage Regulator Wiring Layout....258
Flex Walker Oil Pump Driver & Motor Wiring Layout....259
Flex Walker Oil-Cleaner Head Driver & Motor Wiring Layout....260
Flex L-R & R-L Proximity Sensor Wiring Layout....261
Flex Oil Valves Wiring Layout....262
Flex Buffer Motor Wiring Layout....263
Flex Variable Buffer Motor Wiring Layout....264
Flex Brush Lift Motor Wiring Layout....265
Flex Vacuum Motor Wiring Layout....266
Flex Squeegee Motor & Switch Wiring Layout....267
Flex Duster Unwind Motor & Switch Wiring Layout....268
Flex Duster Windup Motor & Switch Wiring Layout....269
Flex Cleaner Pump #1 Wiring Layout....270
Flex Cleaner Pump #2 Wiring Layout....271
Flex Start Button & Duster Presoak Button Wiring Layout....272
Flex Oil Float & Cleaner Float Wiring Layout....273
Flex Speed Tach & LDS Wiring Layout....274
Flex LED Tank Light Wiring Layout....275
Flex 7 Pin & 10 pin Side Approach Distance Sensor Wiring....276
Flex Walker Bumper & Whisker Switch Wiring....277

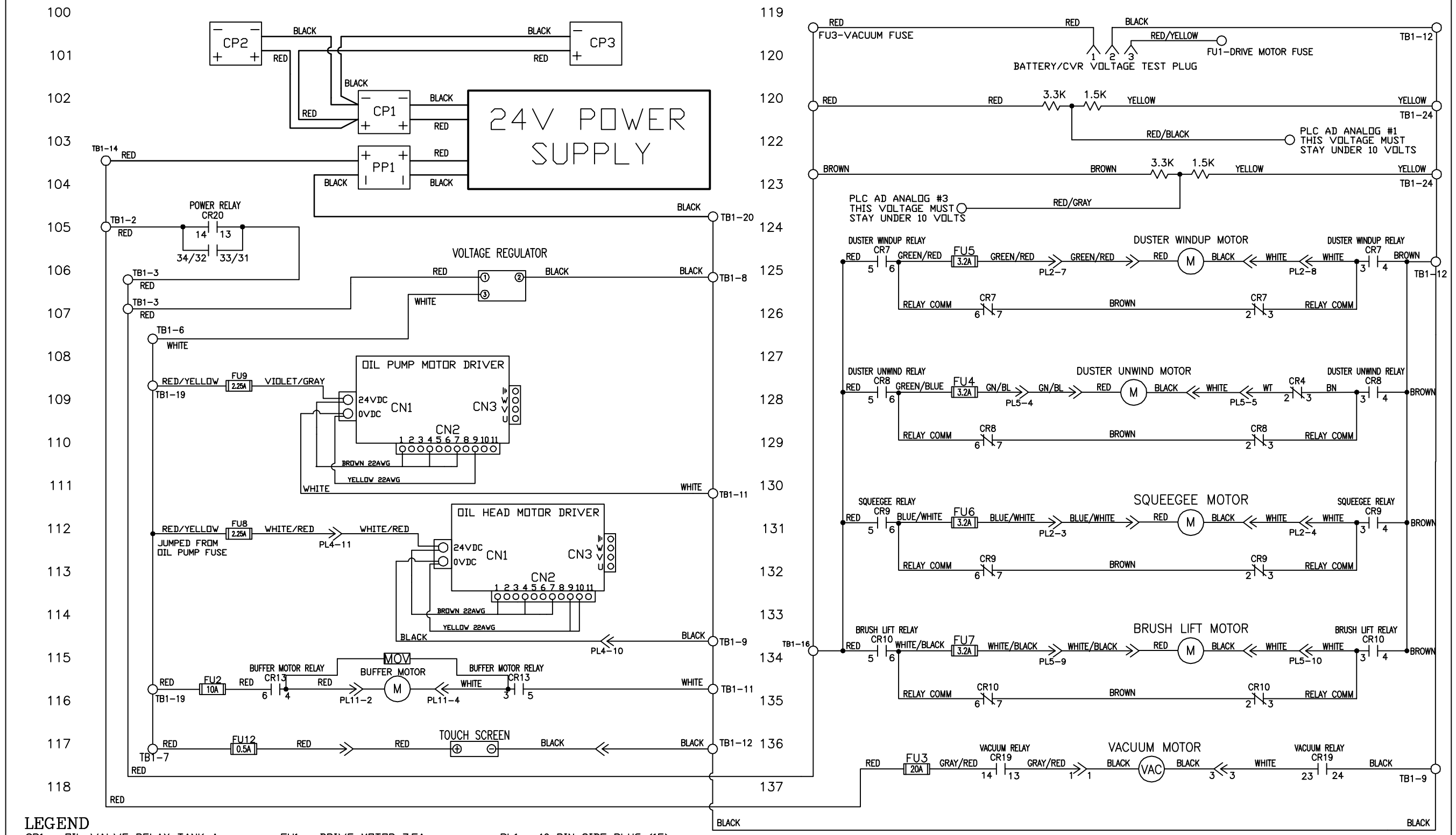


## LEGEND

CR1 - OIL VALVE RELAY TANK A
CR2 - OIL VALVE RELAY TANK B
CR3 - CONTROL RELAY
CR4 - DUSTER POLARITY SWITCH RELAY
CR5 - PIN DECK TREATMENT RELAY
CR6 - POWER OFF RELAY
CR7 - DUSTER WINDUP MOTOR RELAY
CR8 - DUSTER UNWIND MOTOR RELAY
CR9 - SQUEEGEE LIFT MOTOR RELAY
CR10 - BRUSH LIFT MOTOR RELAY
CR11 - FORWARD DRIVE MOTOR RELAY
CR12 - REVERSE DRIVE MOTOR RELAY
CR13 - BUFFER MOTOR RELAY
CR14 - WHISKER ENABLE RELAY
CR15 - WHISKER 7 PIN SIDE RELAY
CR16 - WHISKER 10 PIN SIDE RELAY
CR17 - ZTR ENABLE RELAY
CR18 - ZTR REVERSE RELAY
CR19 - VACUUM MOTOR RELAY
CR20 - POWER RELAY

FU1 - DRIVE MOTOR 7.5A
FU2 - BUFFER MOTOR 10A/20A
FU3 - VACUUM MOTOR 20A
FU4 - DUSTER UNWIND 3.2A
FU5 - DUSTER WINDUP 3.2A
FU6 - SQUEEGEE MOTOR 3.2A
FU7 - BRUSH LIFT MOTOR 3.2A
FU8 - HEAD DRIVE MOTOR 2.25A
FU9 - OIL PUMP MOTOR 2.25A
FU10 - PLC INPUT POWER/L1 0.5A
FU11 - PLC OUTPUT COMMON 0.5A
FU12 - TOUCH SCREEN 0.5A
FU13 - CLEANER PUMP #1 3.2A
FU14 - CLEANER PUMP #2 3.2A
FU15 - CVR POWER 25A/30A
FU16 - LED LIGHTS 1A
FU17 - TRIGGER SOLENOID 3.2A

PL1 - 10-PIN SIDE PLUG (15)
PL2 - 10-PIN SIDE PLUG (12)
PL3 - 10-PIN SIDE PLUG (9)
PL4 - 7-PIN SIDE PLUG (15)
PL5 - 7-PIN SIDE PLUG (12)
PL6 - DRIVE SPEED BOARD PLUG (12)
PL7 - CLEANER PUMP #1 SPEED BOARD PLUG (9)
PL8 - CLEANER PUMP #2 SPEED BOARD PLUG (9)
PL9 - ZTR DRIVE MOTOR PLUG (3)
PL10 - BUFFER SPEED BOARD PLUG (12)
PL11 - BUFFER MOTOR PLUG (5)
PL12 - BUFFER MOTOR VARIABLE SPEED PLUG (5)
PL13 - OIL PLATE ASSEMBLY PLUG (6)

TB1 - TERMINAL BLOCK 1 (MAIN)
TB2 - TERMINAL BLOCK 2 (10-PIN SIDE)
TB3 - TERMINAL BLOCK 3 (7-PIN SIDE)
TB4 - TERMINAL BLOCK 4 (OIL PLATE)
TB5 - TERMINAL BLOCK 5 (TOP PLC PLATE)

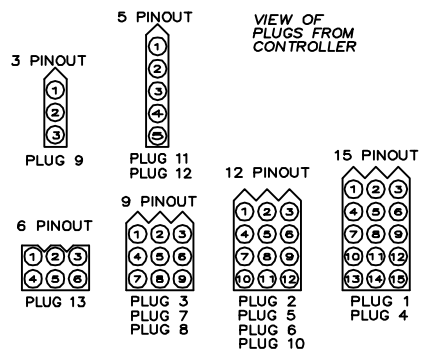


CP1 - CHARGING PLUG BATTERY (BLUE)
CP2 - CHARGING PLUG INSIDE (BLUE)
CP3 - CHARGING PLUG OUTSIDE (BLUE)
PP1 - POWER PLUG (RED)

| | | | |
|---|---|---|---|
| MATERIAL N/A | | KEGEL | 1951 LONGLEAF BLVD. LAKE WALES, FL 33859 (863) 734-0200 |
| | | DESCRIPTION MOTOR WIRING SCHEMATIC | |
| | | DO NOT SCALE DRAWING | |
| DRAWN BY SLS | DATE 07/23/18 | | |
| APPROVED: MP | REV DATE | SIZE C | QTY/MACHINE N/A |
| DOC REV | | SCALE N/A | SHEET 1 OF 27 |

PART NUMBER: FLEX WALKER 2019

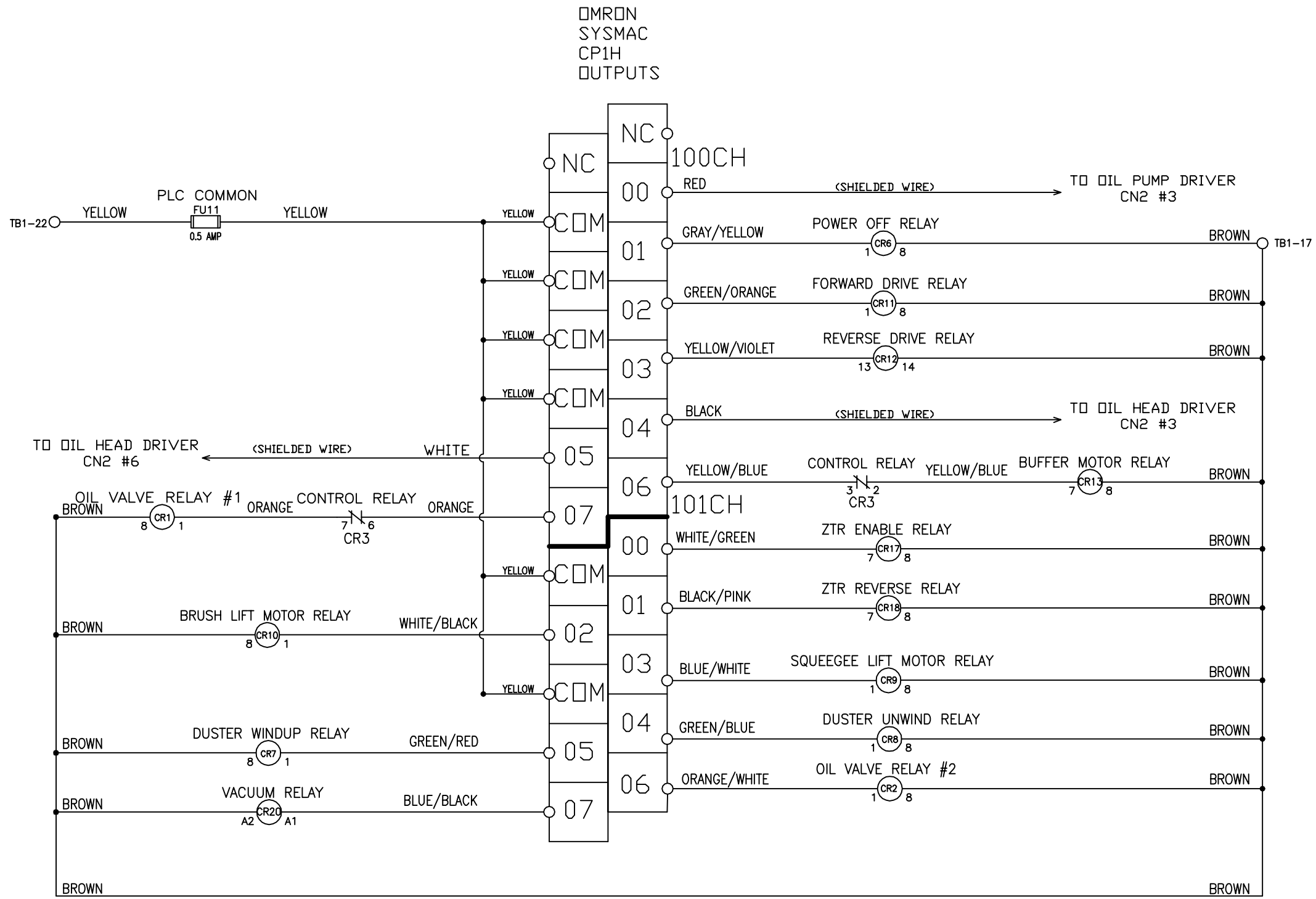


## LEGEND

CR1 - OIL VALVE RELAY TANK A
CR2 - OIL VALVE RELAY TANK B
CR3 - CONTROL RELAY
CR4 - DUSTER POLARITY SWITCH RELAY
CR5 - PIN DECK TREATMENT RELAY
CR6 - POWER OFF RELAY
CR7 - DUSTER WINDUP MOTOR RELAY
CR8 - DUSTER UNWIND MOTOR RELAY
CR9 - SQUEEGEE LIFT MOTOR RELAY
CR10 - BRUSH LIFT MOTOR RELAY
CR11 - FORWARD DRIVE MOTOR RELAY
CR12 - REVERSE DRIVE MOTOR RELAY
CR13 - BUFFER MOTOR RELAY
CR14 - WHISKER ENABLE RELAY
CR15 - WHISKER 7 PIN SIDE RELAY
CR16 - WHISKER 10 PIN SIDE RELAY
CR17 - ZTR ENABLE RELAY
CR18 - ZTR REVERSE RELAY
CR19 - VACUUM MOTOR RELAY
CR20 - POWER RELAY

FU1 - DRIVE MOTOR 7.5A
FU2 - BUFFER MOTOR 10A/20A
FU3 - VACUUM MOTOR 20A
FU4 - DUSTER UNWIND 3.2A
FU5 - DUSTER WINDUP 3.2A
FU6 - SQUEEGEE MOTOR 3.2A
FU7 - BRUSH LIFT MOTOR 3.2A
FU8 - HEAD DRIVE MOTOR 2.25A
FU9 - OIL PUMP MOTOR 2.25A
FU10 - PLC INPUT POWER/L1 0.5A
FU11 - PLC OUTPUT COMMON 0.5A
FU12 - TOUCH SCREEN 0.5A
FU13 - CLEANER PUMP #1 3.2A
FU14 - CLEANER PUMP #2 3.2A
FU15 - CVR POWER 25A/30A
FU16 - LED LIGHTS 1A
FU17 - TRIGGER SOLENOID 3.2A

PL1 - 10-PIN SIDE PLUG (15)
PL2 - 10-PIN SIDE PLUG (12)
PL3 - 10-PIN SIDE PLUG (9)
PL4 - 7-PIN SIDE PLUG (15)
PL5 - 7-PIN SIDE PLUG (12)
PL6 - DRIVE SPEED BOARD PLUG (12)
PL7 - CLEANER PUMP #1 SPEED BOARD PLUG (9)
PL8 - CLEANER PUMP #2 SPEED BOARD PLUG (9)
PL9 - ZTR DRIVE MOTOR PLUG (3)
PL10 - BUFFER SPEED BOARD PLUG (12)
PL11 - BUFFER MOTOR PLUG (5)
PL12 - BUFFER MOTOR VARIABLE SPEED PLUG (5)
PL13 - OIL PLATE ASSEMBLY PLUG (6)

TB1 - TERMINAL BLOCK 1 (MAIN)
TB2 - TERMINAL BLOCK 2 (10-PIN SIDE)
TB3 - TERMINAL BLOCK 3 (7-PIN SIDE)
TB4 - TERMINAL BLOCK 4 (OIL PLATE)
TB5 - TERMINAL BLOCK 5 (TOP PLC PLATE)

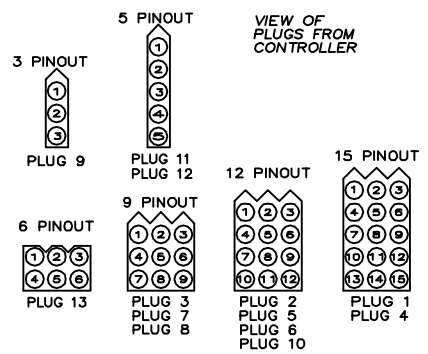


CP1 - CHARGING PLUG BATTERY (BLUE)
CP2 - CHARGING PLUG INSIDE (BLUE)
CP3 - CHARGING PLUG OUTSIDE (BLUE)
PP1 - POWER PLUG (RED)

| | | | |
|---|---|---|---|
| MATERIAL N/A | | KEGEL | 1951 LONGLEAF BLVD. LAKE WALES, FL 33859 (863) 734-0200 |
| | | DESCRIPTION OUTPUT WIRING SCHEMATIC | |
| | | DO NOT SCALE DRAWING | |
| DRAWN BY: SLS | DATE: 07/23/18 | | |
| APPROVED: MP | REV DATE: | SIZE: C | QTY/MACHINE: N/A |
| DOC REV: | | PART NUMBER: FLEX WALKER 2019 | |
| | | SCALE: N/A | SHEET: 2 OF 27 |

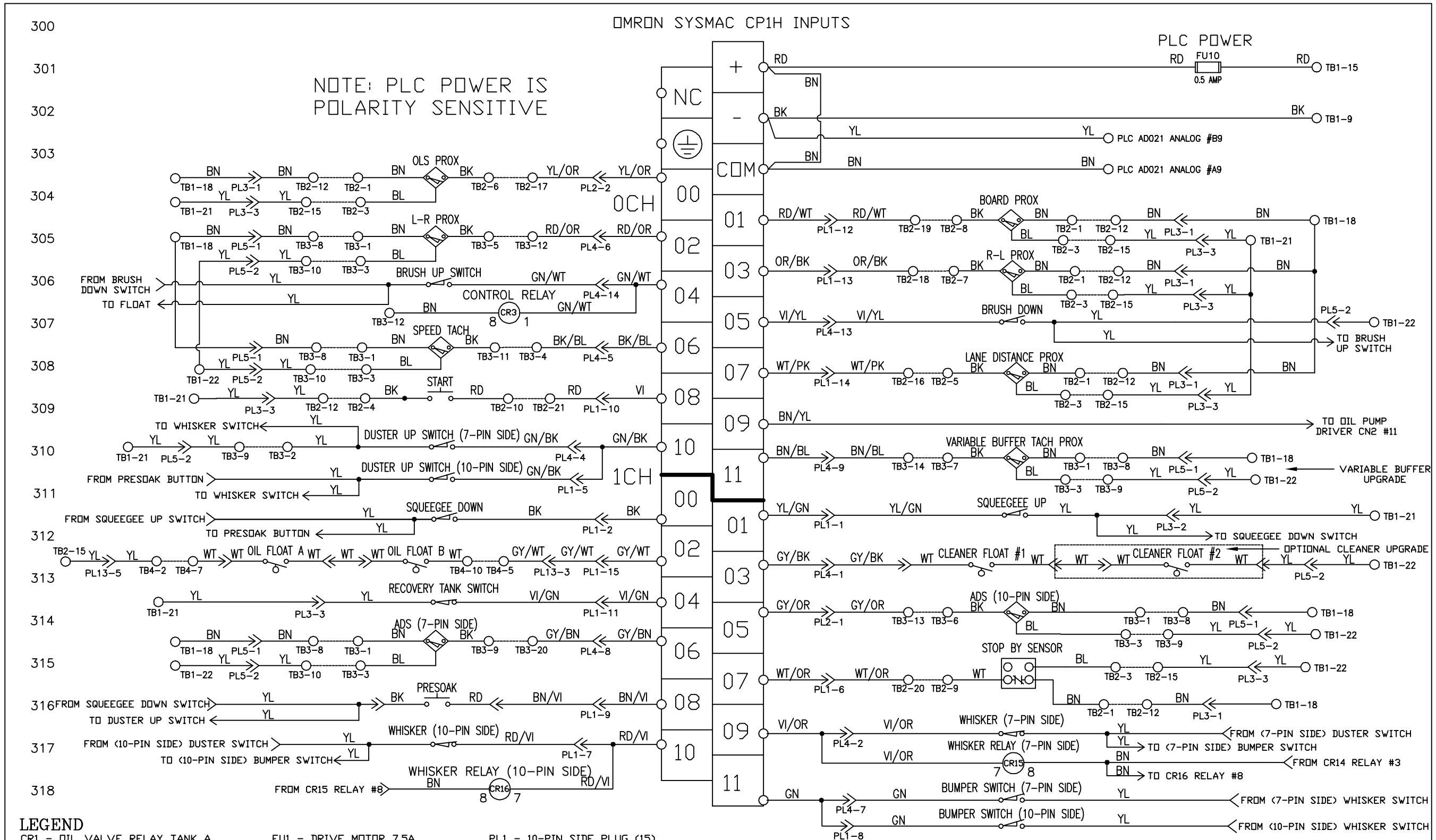


## LEGEND

CR1 - OIL VALVE RELAY TANK A
CR2 - OIL VALVE RELAY TANK B
CR3 - CONTROL RELAY
CR4 - DUSTER POLARITY SWITCH RELAY
CR5 - PIN DECK TREATMENT RELAY
CR6 - POWER OFF RELAY
CR7 - DUSTER WINDUP MOTOR RELAY
CR8 - DUSTER UNWIND MOTOR RELAY
CR9 - SQUEEGEE LIFT MOTOR RELAY
CR10 - BRUSH LIFT MOTOR RELAY
CR11 - FORWARD DRIVE MOTOR RELAY
CR12 - REVERSE DRIVE MOTOR RELAY
CR13 - BUFFER MOTOR RELAY
CR14 - WHISKER ENABLE RELAY
CR15 - WHISKER 7 PIN SIDE RELAY
CR16 - WHISKER 10 PIN SIDE RELAY
CR17 - ZTR ENABLE RELAY
CR18 - ZTR REVERSE RELAY
CR19 - VACUUM MOTOR RELAY
CR20 - POWER RELAY

FU1 - DRIVE MOTOR 7.5A
FU2 - BUFFER MOTOR 10A/20A
FU3 - VACUUM MOTOR 20A
FU4 - DUSTER UNWIND 3.2A
FU5 - DUSTER WINDUP 3.2A
FU6 - SQUEEGEE MOTOR 3.2A
FU7 - BRUSH LIFT MOTOR 3.2A
FU8 - HEAD DRIVE MOTOR 2.25A
FU9 - OIL PUMP MOTOR 2.25A
FU10 - PLC INPUT POWER/L1 0.5A
FU11 - PLC OUTPUT COMMON 0.5A
FU12 - TOUCH SCREEN 0.5A
FU13 - CLEANER PUMP #1 3.2A
FU14 - CLEANER PUMP #2 3.2A
FU15 - CVR POWER 25A/30A
FU16 - LED LIGHTS 1A
FU17 - TRIGGER SOLENOID 3.2A

PL1 - 10-PIN SIDE PLUG (15)
PL2 - 10-PIN SIDE PLUG (12)
PL3 - 10-PIN SIDE PLUG (9)
PL4 - 7-PIN SIDE PLUG (15)
PL5 - 7-PIN SIDE PLUG (12)
PL6 - DRIVE SPEED BOARD PLUG (12)
PL7 - CLEANER PUMP #1 SPEED BOARD PLUG (9)
PL8 - CLEANER PUMP #2 SPEED BOARD PLUG (9)
PL9 - ZTR DRIVE MOTOR PLUG (3)
PL10 - BUFFER SPEED BOARD PLUG (12)
PL11 - BUFFER MOTOR PLUG (5)
PL12 - BUFFER MOTOR VARIABLE SPEED PLUG (5)
PL13 - OIL PLATE ASSEMBLY PLUG (6)

TB1 - TERMINAL BLOCK 1 (MAIN)
TB2 - TERMINAL BLOCK 2 (10-PIN SIDE)
TB3 - TERMINAL BLOCK 3 (7-PIN SIDE)
TB4 - TERMINAL BLOCK 4 (OIL PLATE)
TB5 - TERMINAL BLOCK 5 (TOP PLC PLATE)

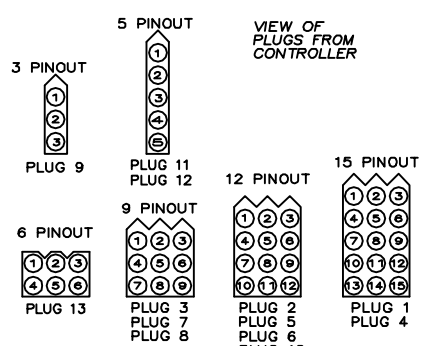


CP1 - CHARGING PLUG BATTERY (BLUE)
CP2 - CHARGING PLUG INSIDE (BLUE)
CP3 - CHARGING PLUG OUTSIDE (BLUE)
PP1 - POWER PLUG (RED)

| | | | |
|---|---|---|---|
| MATERIAL N/A | KEGEL | 1951 LONGLEAF BLVD. LAKE WALES, FL 33859 (863) 734-0200 | |
| | DESCRIPTION INPUT WIRING SCHEMATIC | | |
| | DO NOT SCALE DRAWING | | |
| DRAWN BY SLS | DATE 07/23/18 | SIZE C | QTY/MACHINE |
| APPROVED: MP | REV DATE | PART NUMBER FLEX WALKER 2019 | |
| DOC REV | | SCALE N/A | SHEET 3 OF 27 |

## SCHEMATIC FOR RESISTOR WIRE ON MAIN DRIVE MOTOR

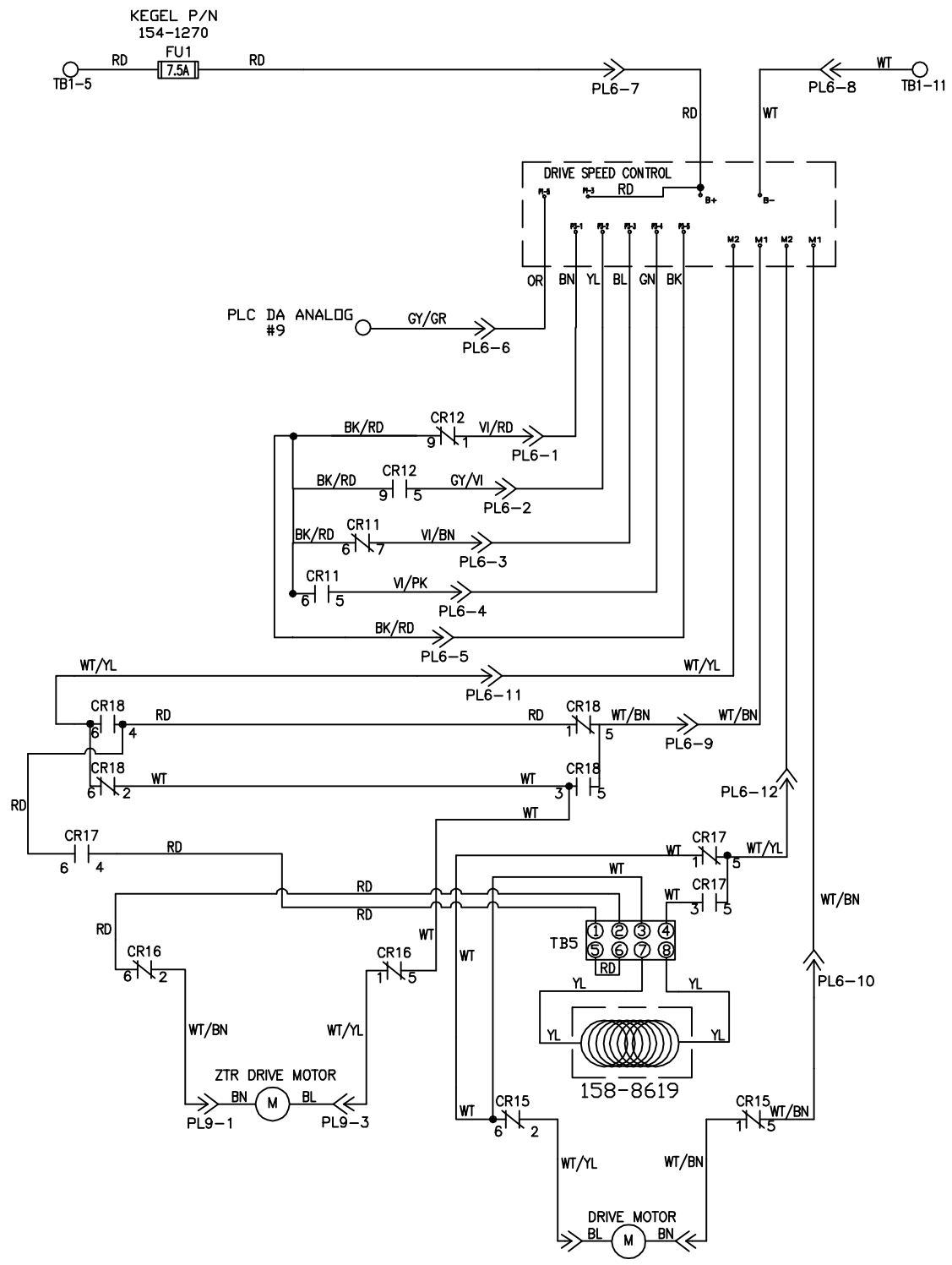


## SCHEMATIC FOR RESISTOR WIRE ON ZTR DRIVE MOTOR

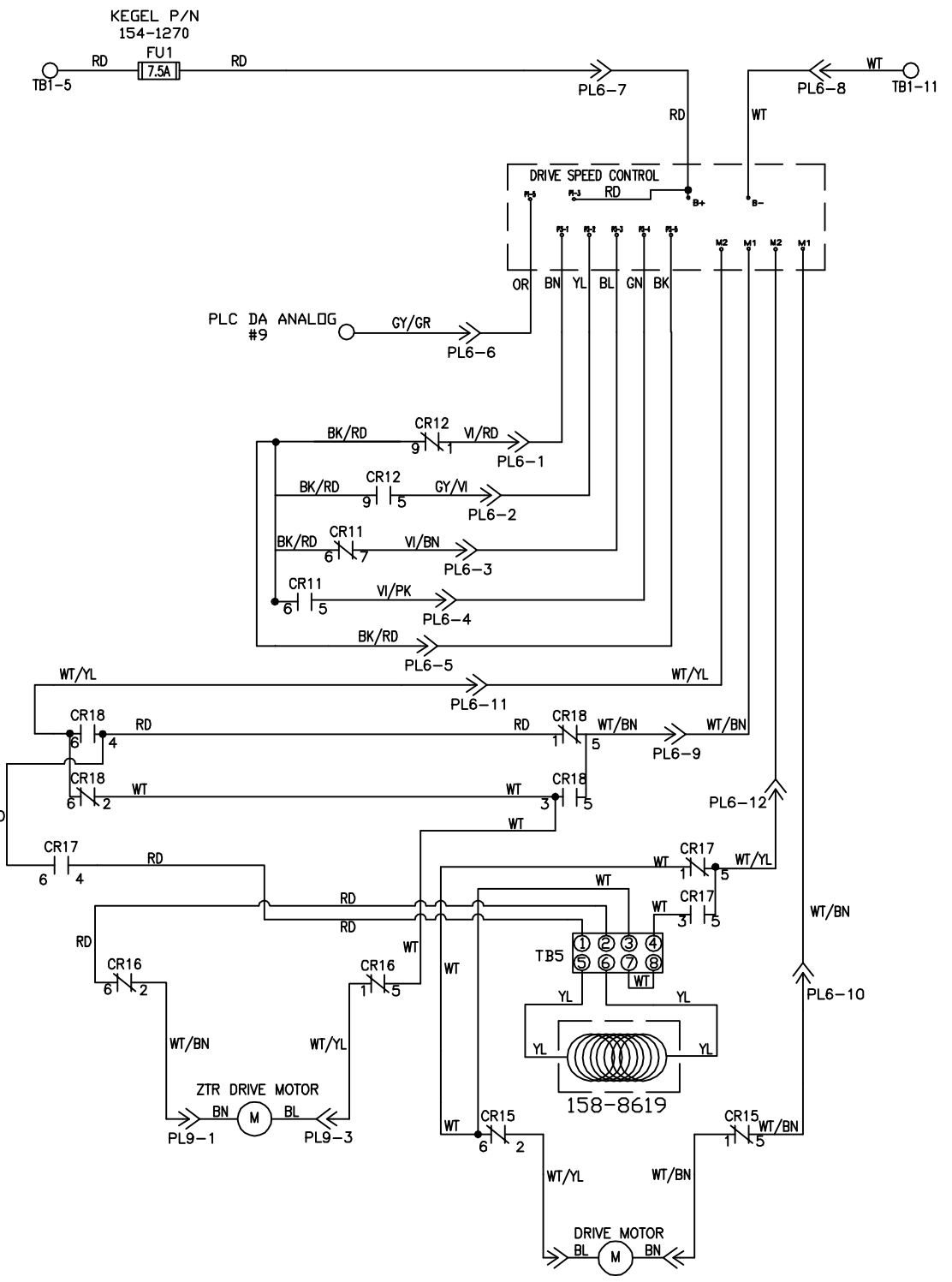


## LEGEND

CR1 - OIL VALVE RELAY TANK A
CR2 - OIL VALVE RELAY TANK B
CR3 - CONTROL RELAY
CR4 - DUSTER POLARITY SWITCH RELAY
CR5 - PIN DECK TREATMENT RELAY
CR6 - POWER OFF RELAY
CR7 - DUSTER WINDUP MOTOR RELAY
CR8 - DUSTER UNWIND MOTOR RELAY
CR9 - SQUEEGEE LIFT MOTOR RELAY
CR10 - BRUSH LIFT MOTOR RELAY
CR11 - FORWARD DRIVE MOTOR RELAY
CR12 - REVERSE DRIVE MOTOR RELAY
CR13 - BUFFER MOTOR RELAY
CR14 - WHISKER ENABLE RELAY
CR15 - WHISKER 7 PIN SIDE RELAY
CR16 - WHISKER 10 PIN SIDE RELAY
CR17 - ZTR ENABLE RELAY
CR18 - ZTR REVERSE RELAY
CR19 - VACUUM MOTOR RELAY
CR20 - POWER RELAY

FU1 - DRIVE MOTOR 7.5A
FU2 - BUFFER MOTOR 10A/20A
FU3 - VACUUM MOTOR 20A
FU4 - DUSTER UNWIND 3.2A
FU5 - DUSTER WINDUP 3.2A
FU6 - SQUEEGEE MOTOR 3.2A
FU7 - BRUSH LIFT MOTOR 3.2A
FU8 - HEAD DRIVE MOTOR 2.25A
FU9 - OIL PUMP MOTOR 2.25A
FU10 - PLC INPUT POWER/L1 0.5A
FU11 - PLC OUTPUT COMMON 0.5A
FU12 - TOUCH SCREEN 0.5A
FU13 - CLEANER PUMP #1 3.2A
FU14 - CLEANER PUMP #2 3.2A
FU15 - CVR POWER 25A/30A
FU16 - LED LIGHTS 1A
FU17 - TRIGGER SOLENOID 3.2A

PL1 - 10-PIN SIDE PLUG (15)
PL2 - 10-PIN SIDE PLUG (12)
PL3 - 10-PIN SIDE PLUG (9)
PL4 - 7-PIN SIDE PLUG (15)
PL5 - 7-PIN SIDE PLUG (12)
PL6 - DRIVE SPEED BOARD PLUG (12)
PL7 - CLEANER PUMP #1 SPEED BOARD PLUG (9)
PL8 - CLEANER PUMP #2 SPEED BOARD PLUG (9)
PL9 - ZTR DRIVE MOTOR PLUG (3)
PL10 - BUFFER SPEED BOARD PLUG (12)
PL11 - BUFFER MOTOR PLUG (5)
PL12 - BUFFER MOTOR VARIABLE SPEED PLUG (5)
PL13 - OIL PLATE ASSEMBLY PLUG (6)

TB1 - TERMINAL BLOCK 1 (MAIN)
TB2 - TERMINAL BLOCK 2 (10-PIN SIDE)
TB3 - TERMINAL BLOCK 3 (7-PIN SIDE)
TB4 - TERMINAL BLOCK 4 (OIL PLATE)
TB5 - TERMINAL BLOCK 5 (TOP PLC PLATE)

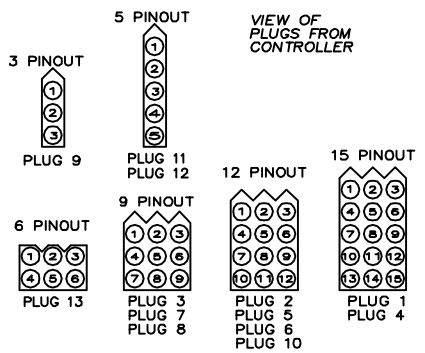


CP1 - CHARGING PLUG BATTERY (BLUE)
CP2 - CHARGING PLUG INSIDE (BLUE)
CP3 - CHARGING PLUG OUTSIDE (BLUE)
PP1 - POWER PLUG (RED)

| | | | |
|---|---|---|---|
| MATERIAL N/A | | KEGEL | 1951 LONGLEAF BLVD. LAKE WALES, FL 33859 (863) 734-0200 |
| | | DESCRIPTION SPEED CONTROL SCHEMATIC | |
| | | DO NOT SCALE DRAWING | |
| DRAWN BY SLS | DATE 07/23/18 | | |
| APPROVED: MP | REV DATE | SIZE C | QTY/MACHINE N/A |
| DOC REV | | SCALE N/A | SHEET 4 OF 27 |

PART NUMBER FLEX WALKER 2019

# BUILT IN PLC ANALOG

## DA AD

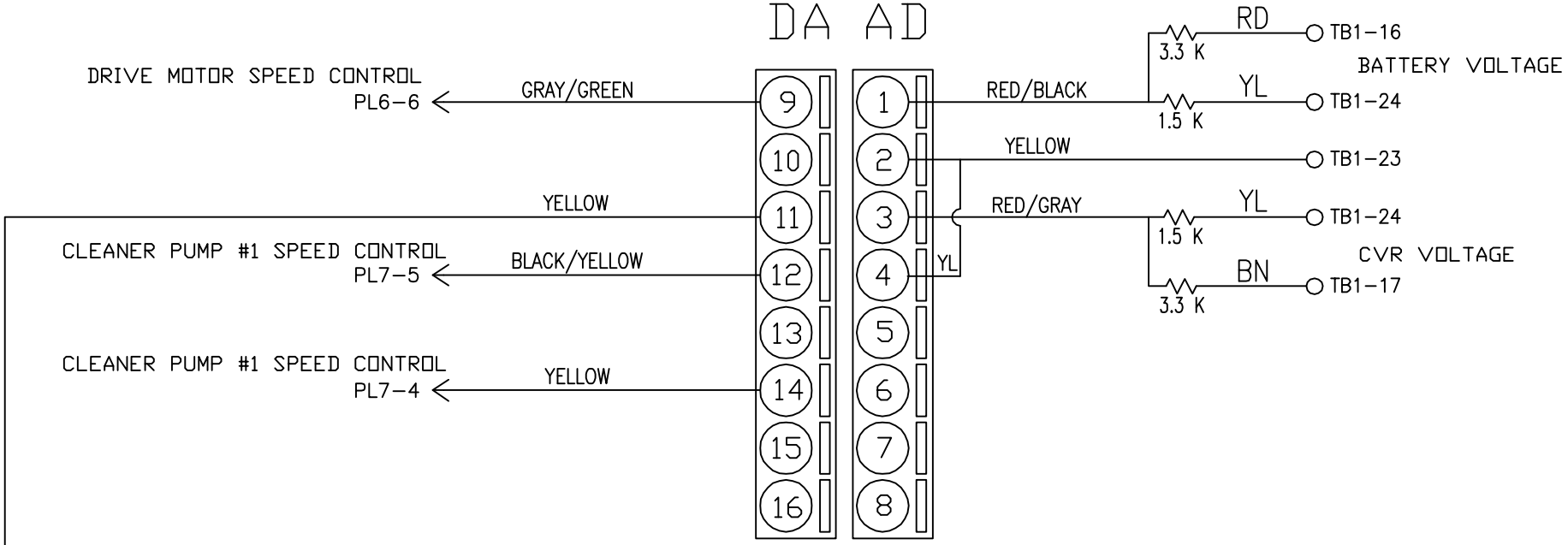


## AD021 ANALOG ADD ON UNIT

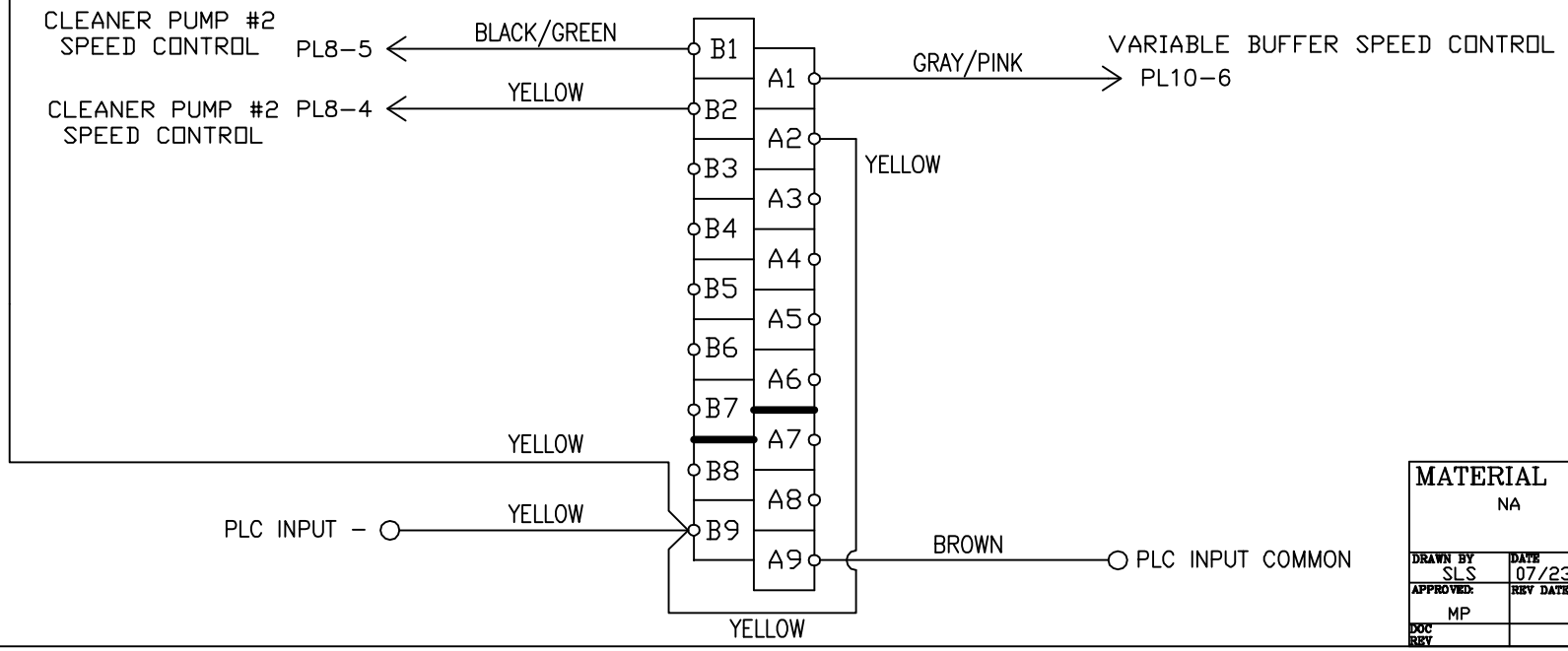


| | | | |
|---|---|---|---|
| MATERIAL: NA | | KEGEL | 1951 LONGLEAF BLVD. LAKE WALES, FL 33859 (863) 734-0200 |
| | | DESCRIPTION: ANALOG WIRING SCHEMATIC | |
| DRAWN BY: SLS | DATE: 07/23/18 | DO NOT SCALE DRAWING | |
| APPROVED: MP | REV DATE: | SIZE: C / QTY/MACHINE: / PART NUMBER: FLEX WALKER 2019 | |
| DOC REV: | | SCALE: N/A | SHEET: 5 OF 27 |

# TB1
(MAIN)

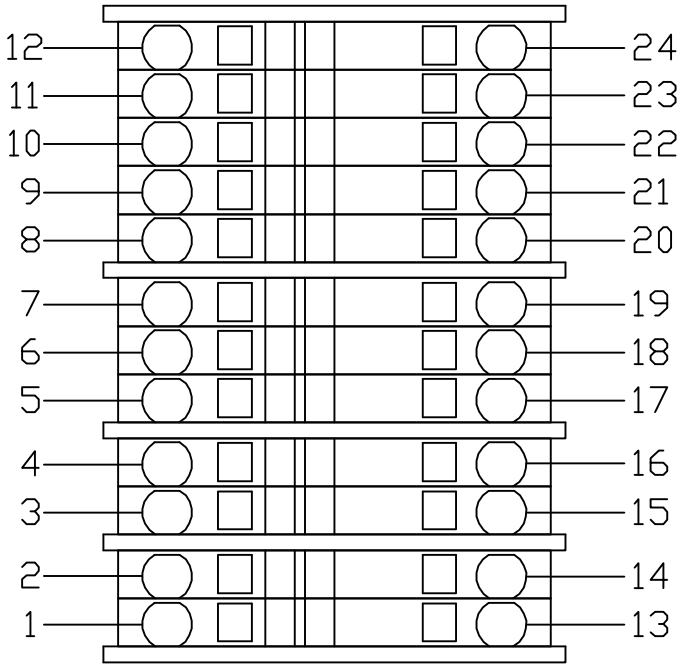


# TB2
(10-PIN SIDE)

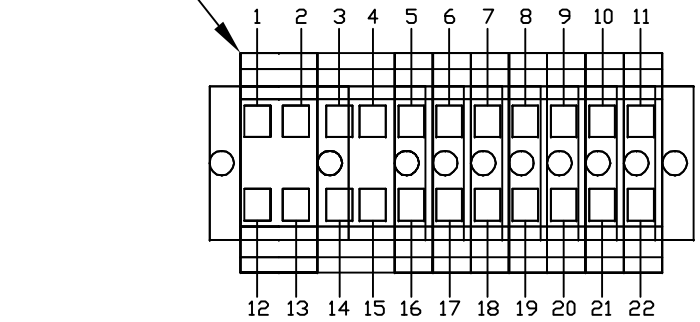


# TB3
(7-PIN SIDE)

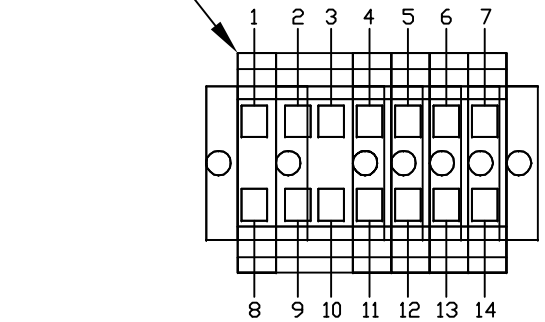


# TB4
(OIL PLATE)

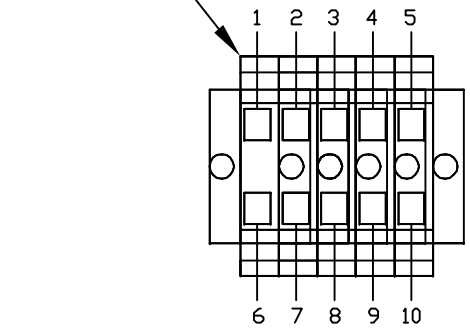


# TB5
(TOP PLC PLATE)

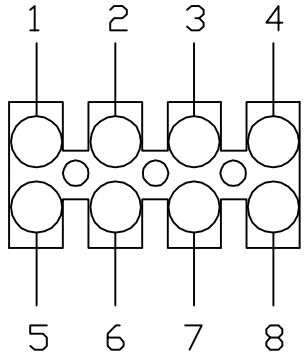


## LEGEND

TB1 - TERMINAL BLOCK 1 (MAIN)
TB2 - TERMINAL BLOCK 2 (10-PIN SIDE)
TB3 - TERMINAL BLOCK 3 (7-PIN SIDE)
TB4 - TERMINAL BLOCK 4 (OIL PLATE)
TB5 - TERMINAL BLOCK 5 (TOP PLC PLATE)

| | | | |
|---|---|---|---|
| MATERIAL: NA | | KEGEL | 1951 LONGLEAF BLVD. LAKE WALES, FL 33859 (863) 734-0200 |
| | | DESCRIPTION: TERMINAL BLOCK LAYOUT | |
| DRAWN BY: SLS | DATE: 07/23/18 | DO NOT SCALE DRAWING | |
| APPROVED: MP | REV DATE: | SIZE: C / QTY/MACHINE: / PART NUMBER: FLEX WALKER 2019 | |
| DOC REV: | | SCALE: N/A | SHEET: 6 OF 27 |

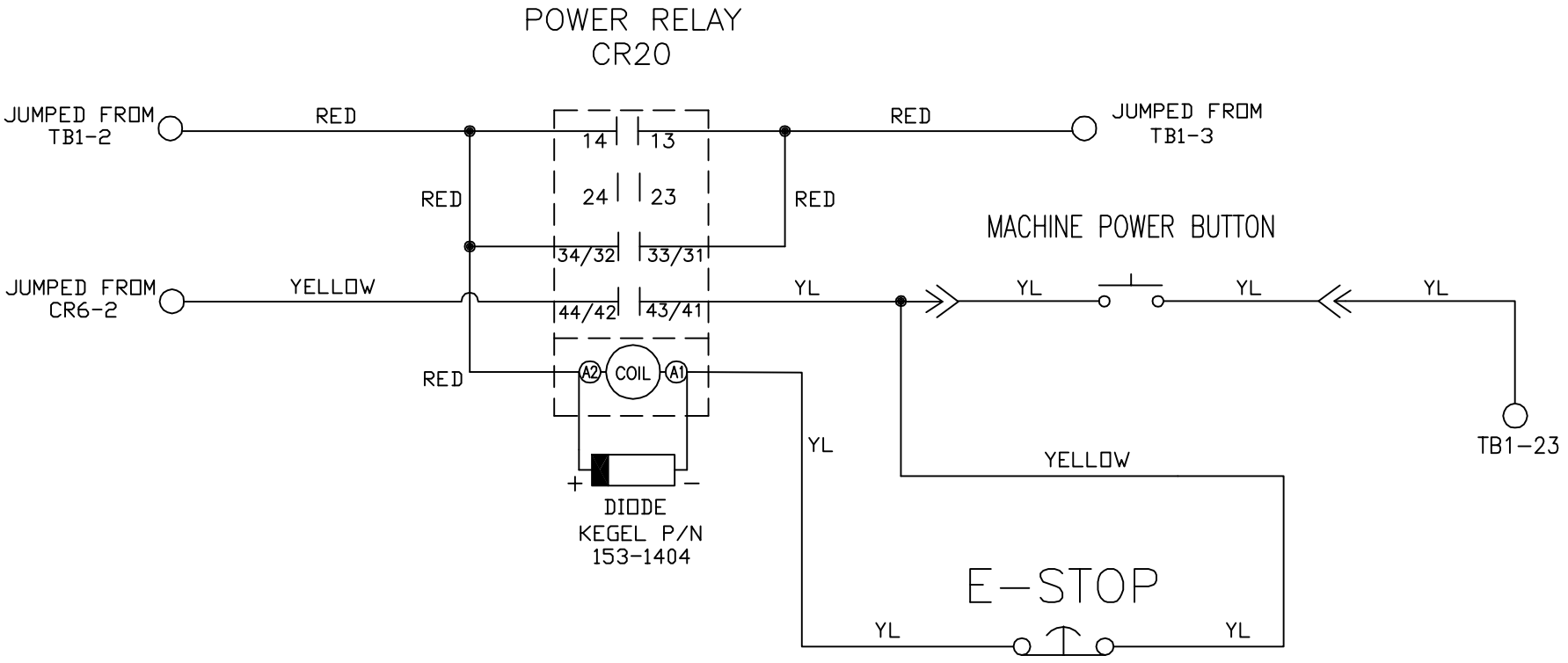


| | | | |
|---|---|---|---|
| MATERIAL: N/A | | THE KEGEL CO. 1951 LONGLEAF BLVD. LAKE WALES, FL 33859 (863) 734-0200 | |
| | | DESCRIPTION: POWER RELAY WIRING | |
| DRAWN BY: SLS | DATE: 07/23/18 | DO NOT SCALE DRAWING | |
| APPROVED: MP | REV DATE: | SIZE: A | QTY/MACHINE: N/A |
| DOC REV: | | SCALE: N/A | SHEET: 7 OF 27 |

PART NUMBER: FLEX WALKER 2019

# VOLTAGE REGULATOR

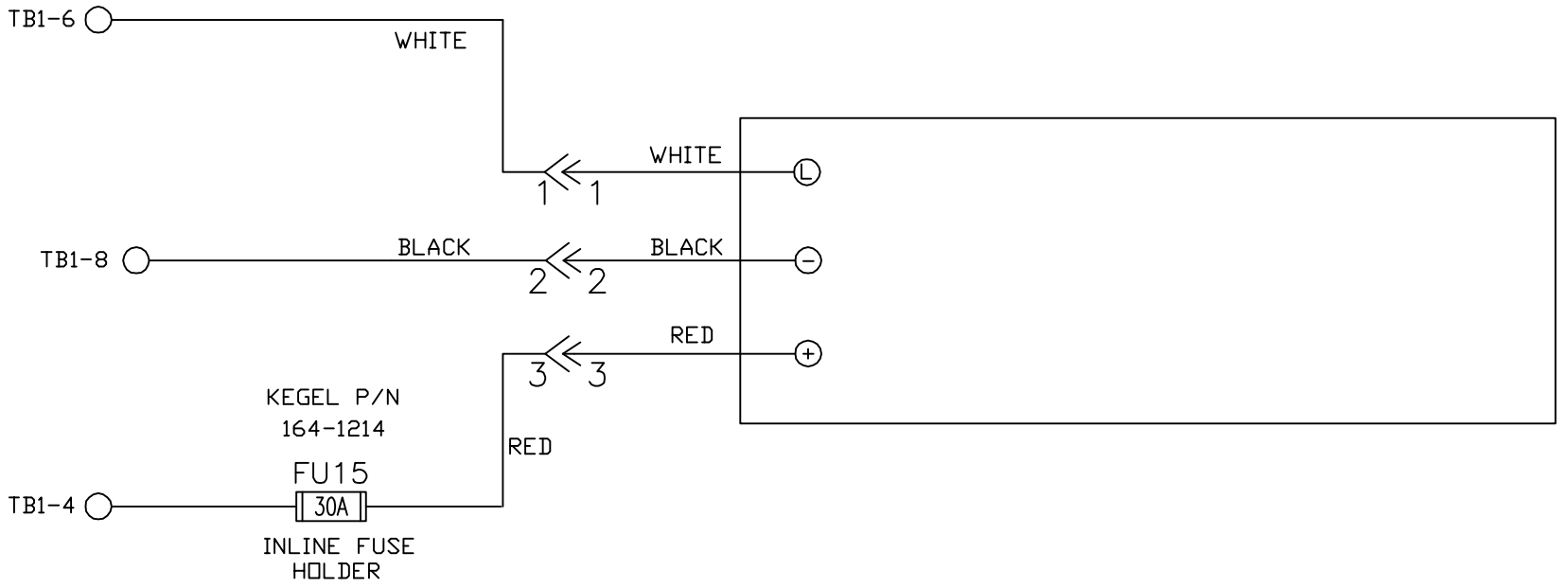


| | | | |
|---|---|---|---|
| MATERIAL: N/A | | THE KEGEL CO. 1951 LONGLEAF BLVD. LAKE WALES, FL 33859 (863) 734-0200 | |
| | | DESCRIPTION: VOLTAGE REGULATOR WIRING | |
| | | DO NOT SCALE DRAWING | |
| DRAWN BY: SLS | DATE: 07/23/18 | SIZE: A | QTY/MACHINE: N/A |
| APPROVED: MP | REV DATE: | PART NUMBER: FLEX WALKER 2019 | |
| DOC REV: | | SCALE: N/A | SHEET: 8 OF 27 |

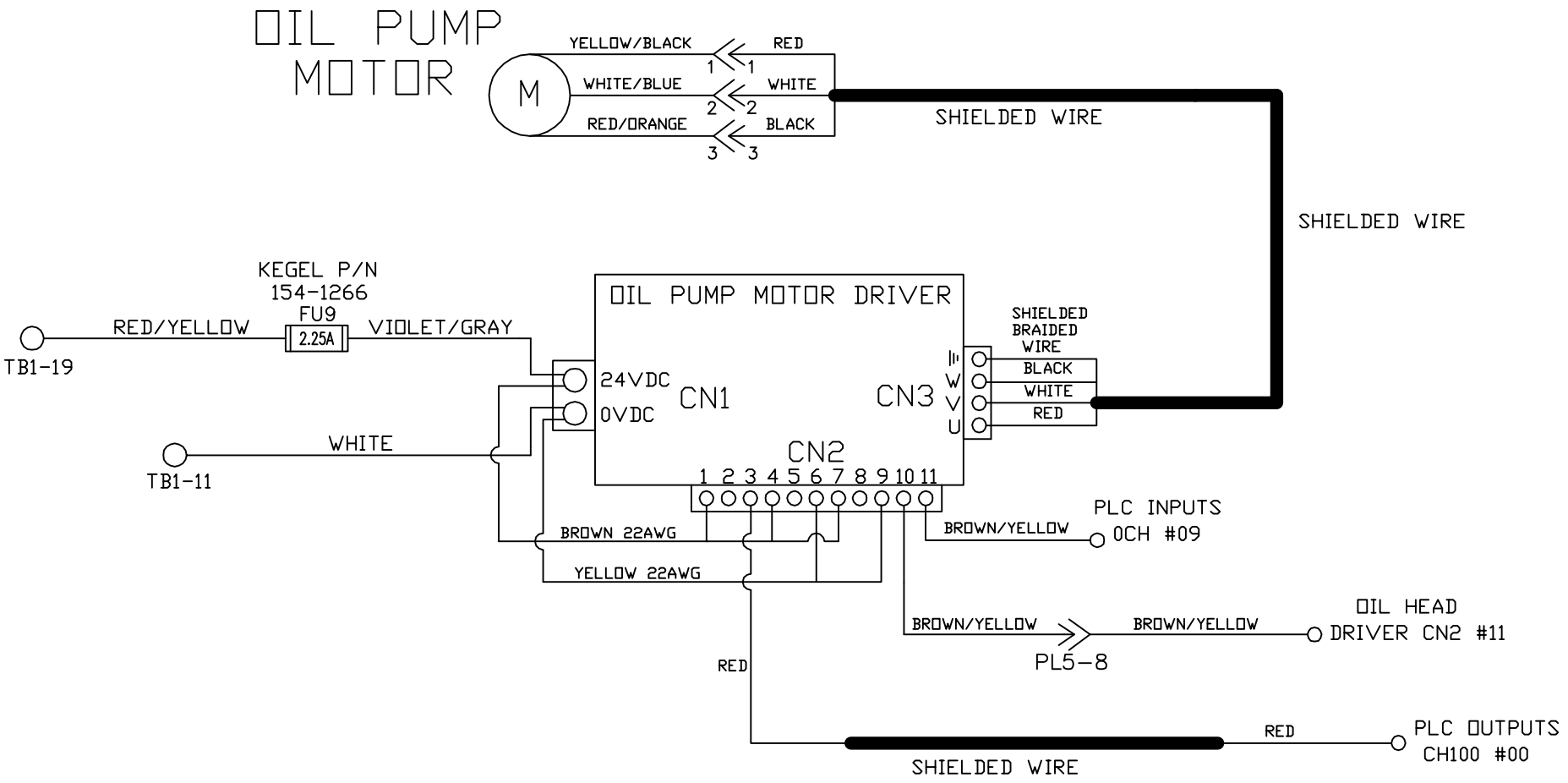


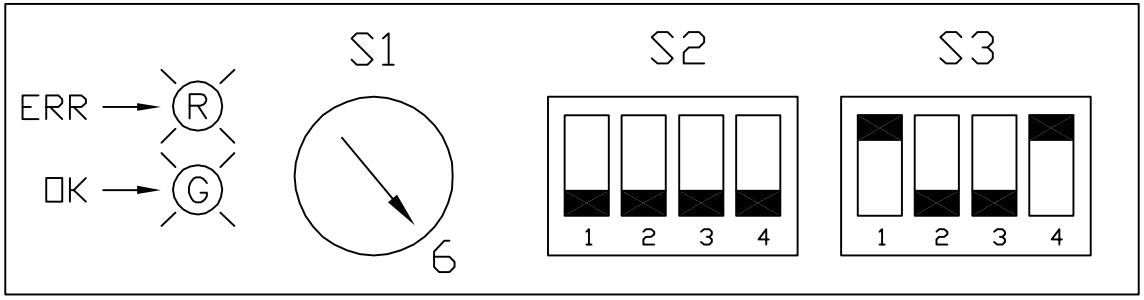


| | | | |
|---|---|---|---|
| MATERIAL N/A | | THE KEGEL CO. 1951 LONGLEAF BLVD. LAKE WALES, FL 33859 (863) 734-0200 | |
| | | DESCRIPTION OIL PUMP DRIVER & MOTOR WIRING | |
| | | DO NOT SCALE DRAWING | |
| DRAWN BY SLS | DATE 07/23/18 | SIZE A | QTY/MACHINE N/A / PART NUMBER FLEX WALKER 2019 |
| APPROVED: MP | REV DATE | | |
| DOC REV | | SCALE N/A | SHEET 9 OF 27 |

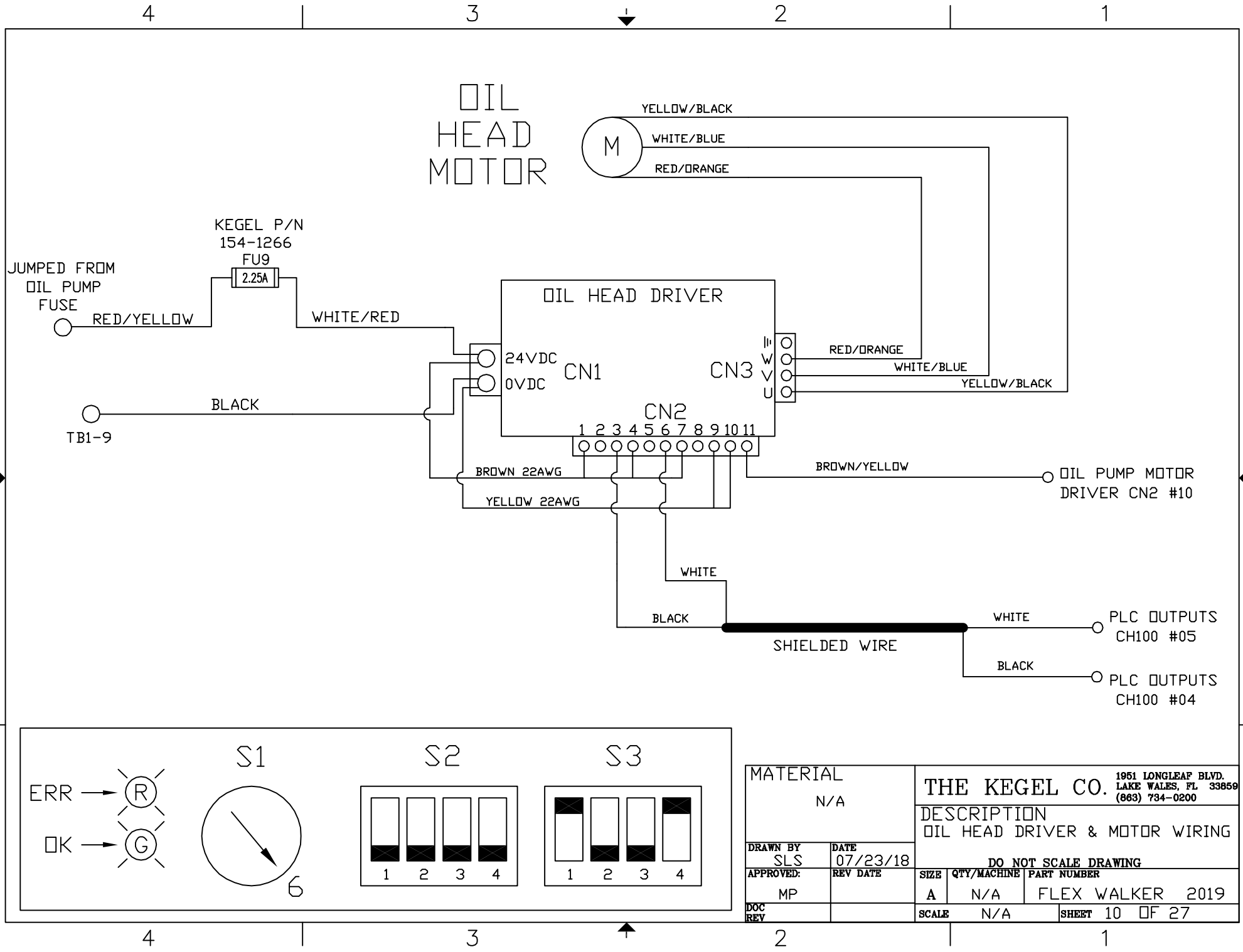


| | | | |
|---|---|---|---|
| MATERIAL N/A | | THE KEGEL CO. 1951 LONGLEAF BLVD. LAKE WALES, FL 33859 (863) 734-0200 | |
| | | DESCRIPTION OIL HEAD DRIVER & MOTOR WIRING | |
| DRAWN BY SLS | DATE 07/23/18 | DO NOT SCALE DRAWING | |
| APPROVED: MP | REV DATE | SIZE A / QTY/MACHINE N/A / PART NUMBER FLEX WALKER 2019 | |
| DOC REV | | SCALE N/A | SHEET 10 OF 27 |

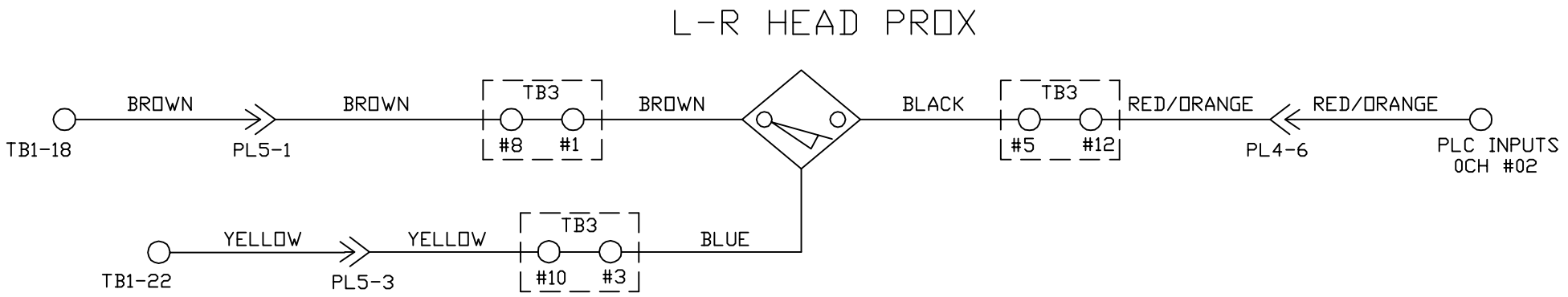


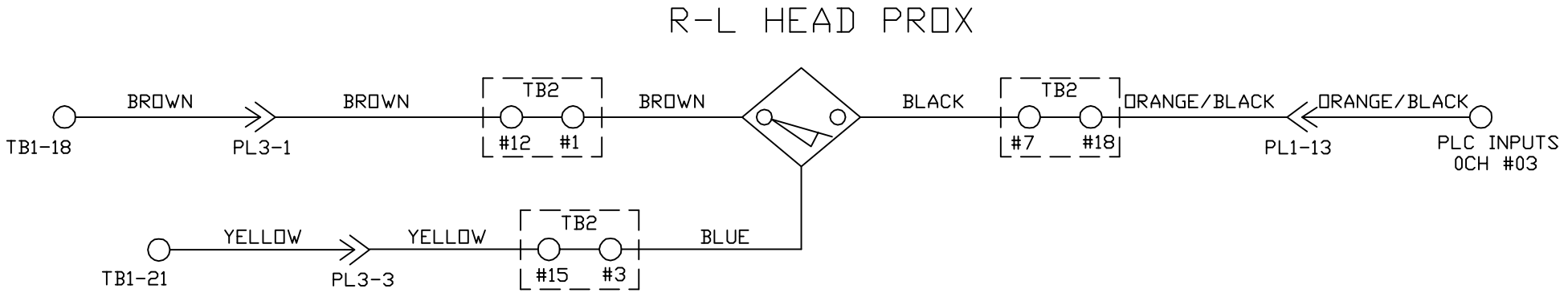


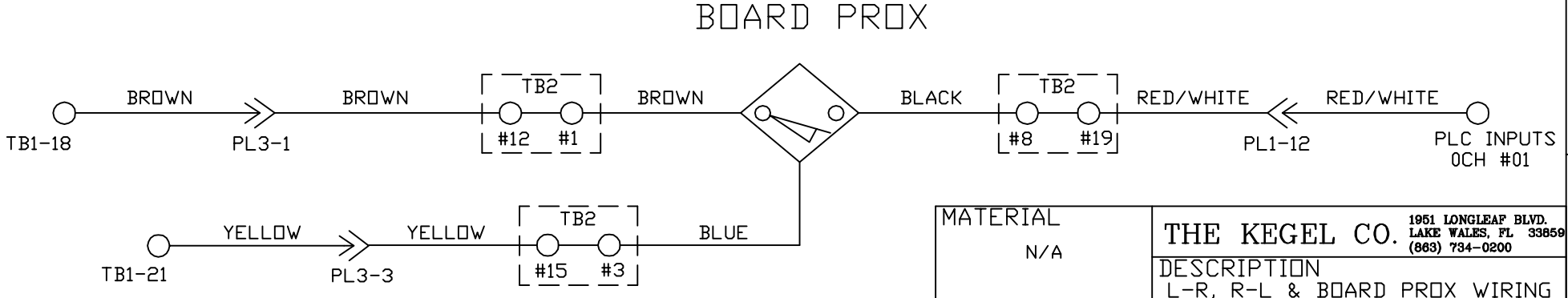


| | | | |
|---|---|---|---|
| MATERIAL: N/A | | THE KEGEL CO. 1951 LONGLEAF BLVD. LAKE WALES, FL 33859 (863) 734-0200 | |
| | | DESCRIPTION: L-R, R-L & BOARD PROX WIRING | |
| DRAWN BY: SLS | DATE: 07/23/18 | DO NOT SCALE DRAWING | |
| APPROVED: MP | REV DATE: | SIZE: A | QTY/MACHINE: N/A |
| DOC REV: | | PART NUMBER: FLEX WALKER 2019 | |
| | | SCALE: N/A | SHEET: 11 OF 27 |

# OIL VALVE #1 — TANK A

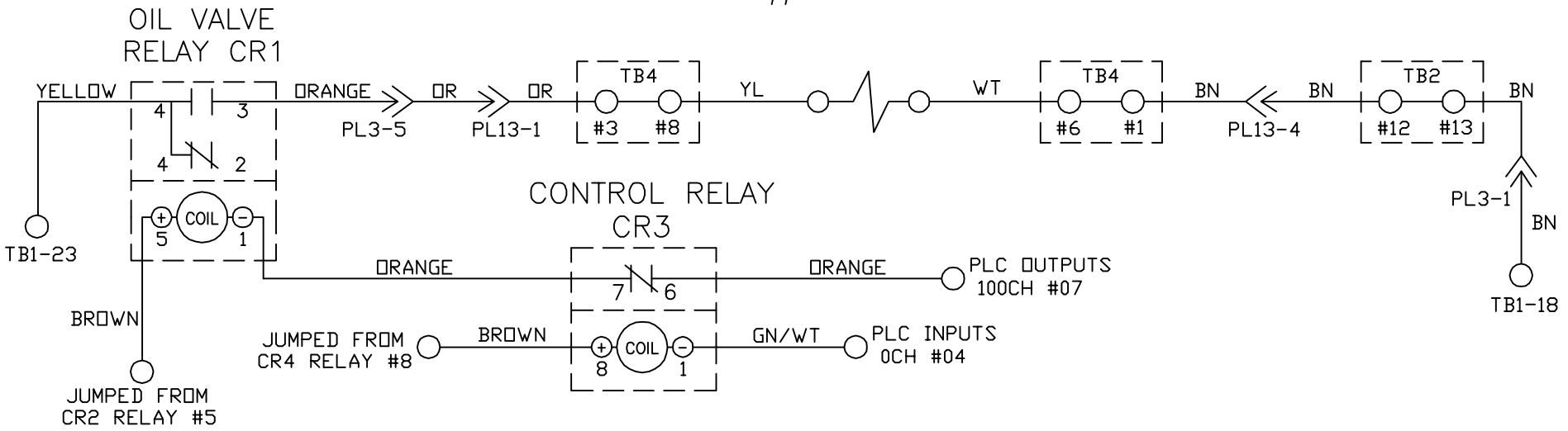


# OIL VALVE #2 — TANK B

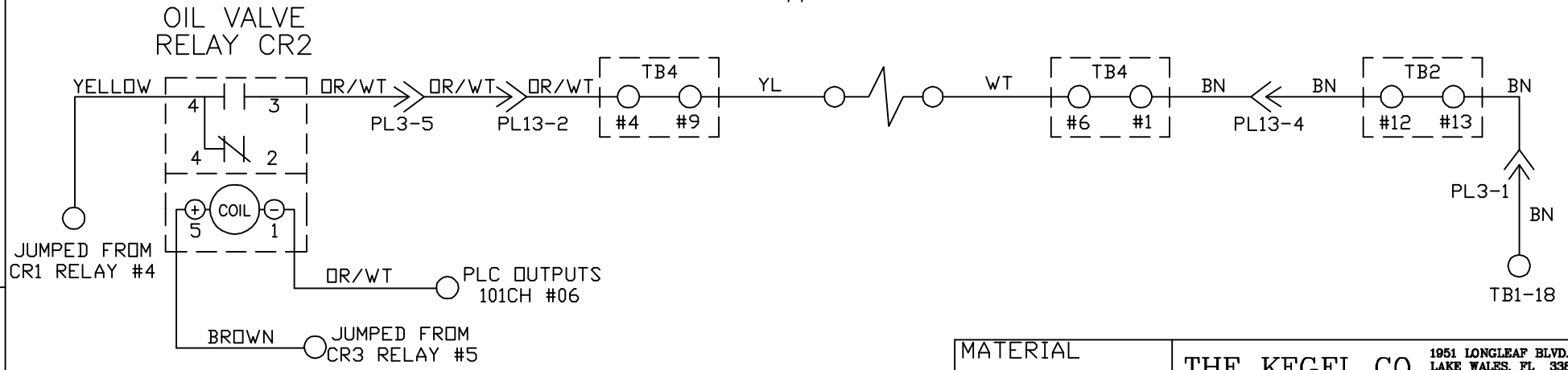


| | | | |
|---|---|---|---|
| MATERIAL | | THE KEGEL CO. 1951 LONGLEAF BLVD. LAKE WALES, FL 33859 (863) 734-0200 | |
| | | DESCRIPTION: OIL VALVES RELAY WIRING | |
| DRAWN BY: SLS | DATE: 07/23/18 | DO NOT SCALE DRAWING | |
| APPROVED: MP | REV DATE: | SIZE: A | QTY/MACHINE: N/A |
| DOC REV: | | PART NUMBER: FLEX WALKER 2019 | |
| | | SCALE: N/A | SHEET: 12 OF 27 |

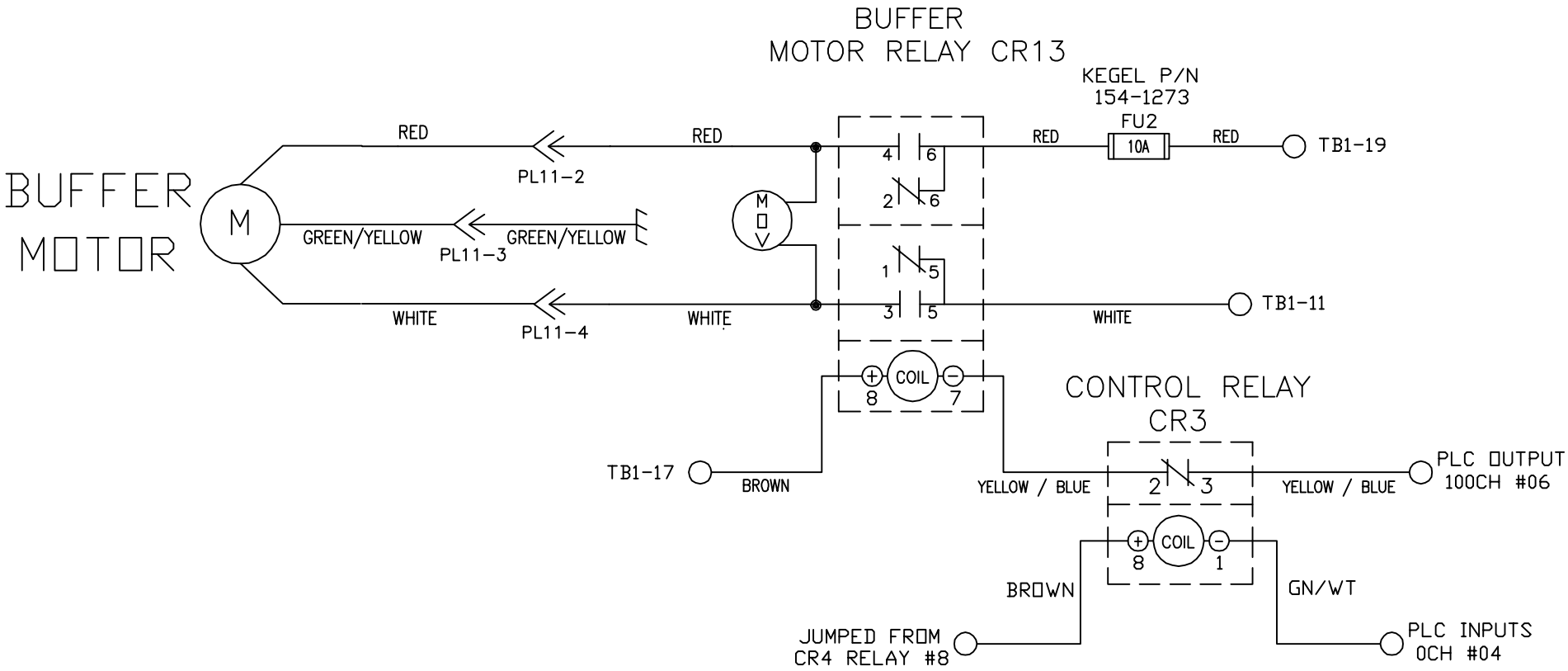


| | | | |
|---|---|---|---|
| MATERIAL: N/A | | THE KEGEL CO. 1951 LONGLEAF BLVD. LAKE WALES, FL 33859 (863) 734-0200 | |
| DRAWN BY: SLS | DATE: 07/23/18 | DESCRIPTION: BUFFER MOTOR WIRING | |
| APPROVED: MP | REV DATE: | DO NOT SCALE DRAWING | |
| DOC REV: | | SIZE: A | QTY/MACHINE: N/A |
| | | PART NUMBER: FLEX WALKER 2019 | |
| | | SCALE: N/A | SHEET: 13 OF 27 |

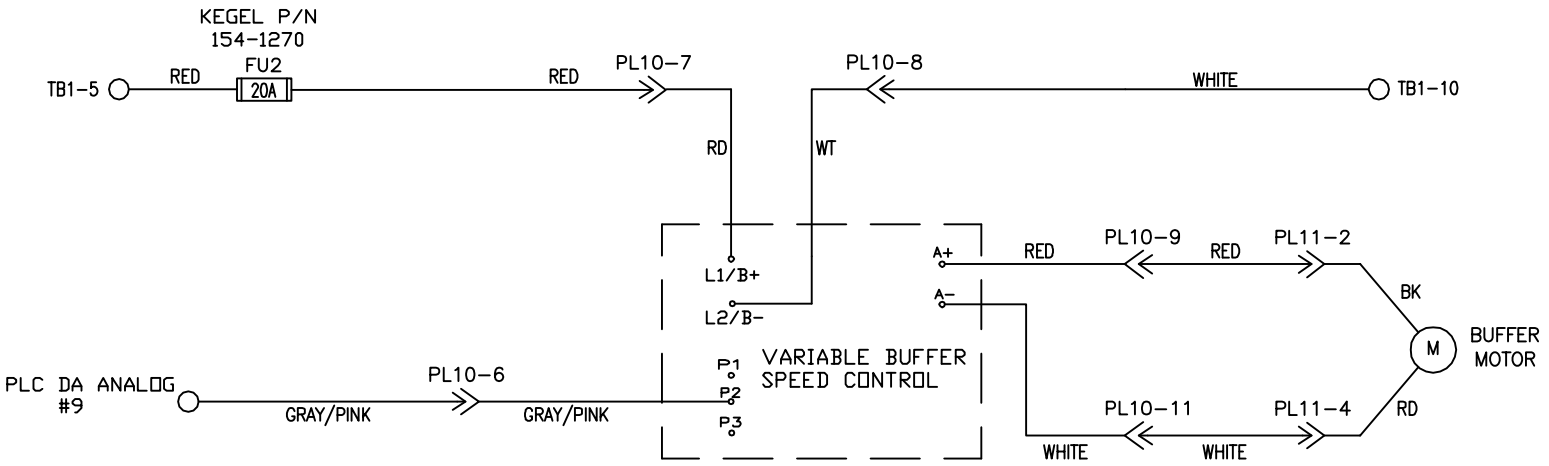


## VARIABLE BUFFER PROX

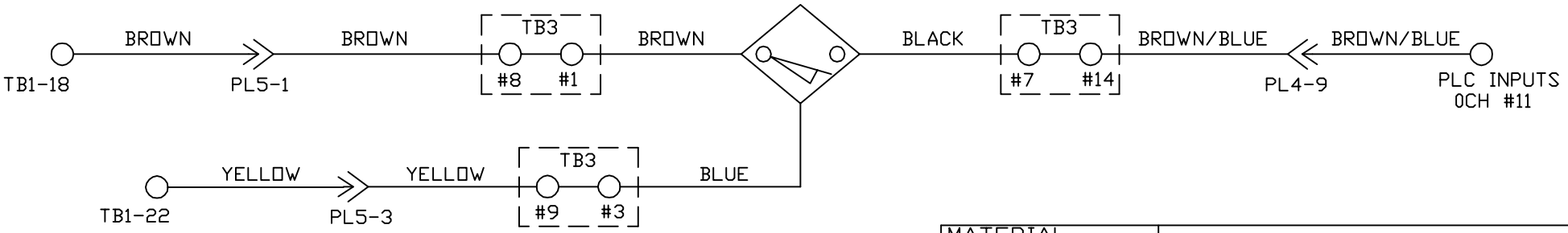


| | | | |
|---|---|---|---|
| MATERIAL: N/A | | THE KEGEL CO. 1951 LONGLEAF BLVD. LAKE WALES, FL 33859 (863) 734-0200 | |
| DRAWN BY: SLS | DATE: 07/23/18 | DESCRIPTION: VARIABLE BUFFER MOTOR & TACH WIRING DO NOT SCALE DRAWING | |
| APPROVED: MP | REV DATE: | SIZE: A | QTY/MACHINE: N/A |
| DOC REV: | | SCALE: N/A | SHEET: 14 OF 27 |

PART NUMBER: FLEX WALKER 2019

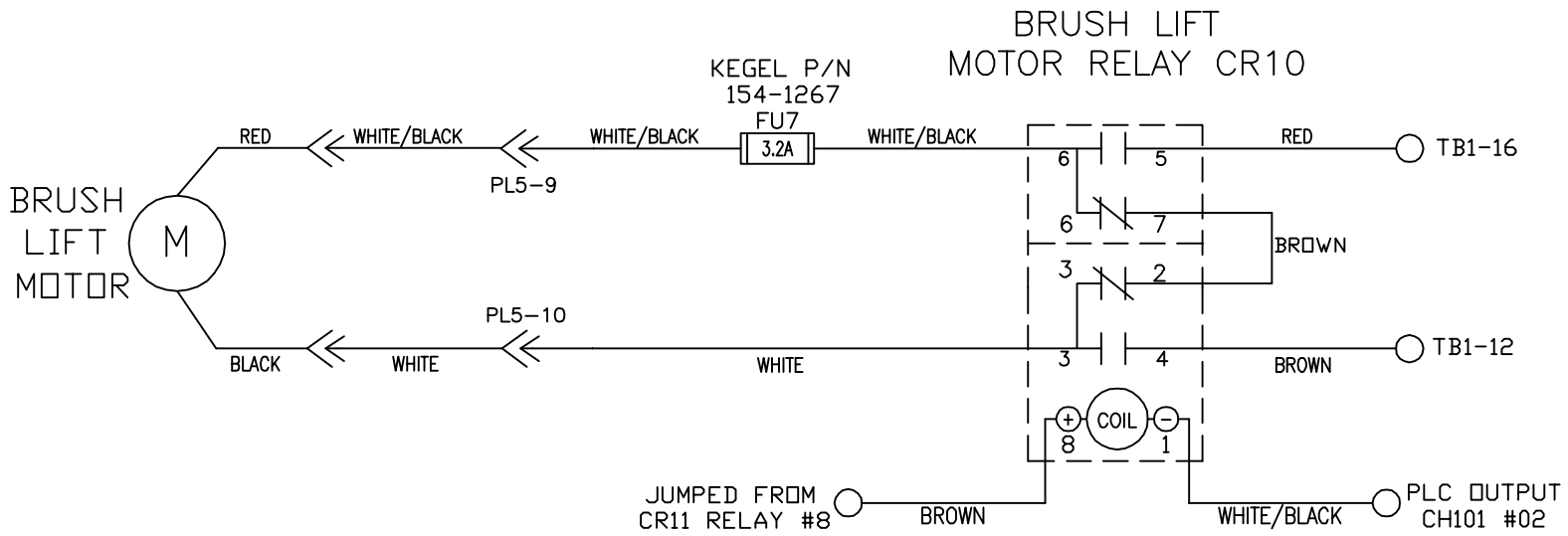


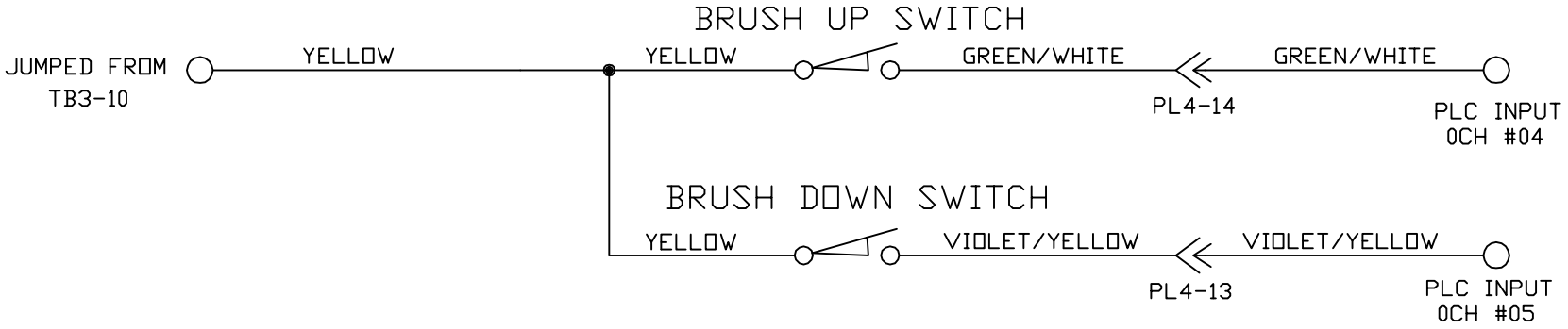


| | | | |
|---|---|---|---|
| MATERIAL: N/A | | THE KEGEL CO. 1951 LONGLEAF BLVD. LAKE WALES, FL 33859 (863) 734-0200 | |
| DRAWN BY: SLS | DATE: 07/23/18 | DESCRIPTION: BRUSH LIFT MOTOR & SWITCH WIRING<br>DO NOT SCALE DRAWING | |
| APPROVED: MP | REV DATE: | SIZE: A | QTY/MACHINE: N/A |
| DOC REV: | | SCALE: N/A | PART NUMBER: FLEX WALKER 2019<br>SHEET: 15 OF 27 |

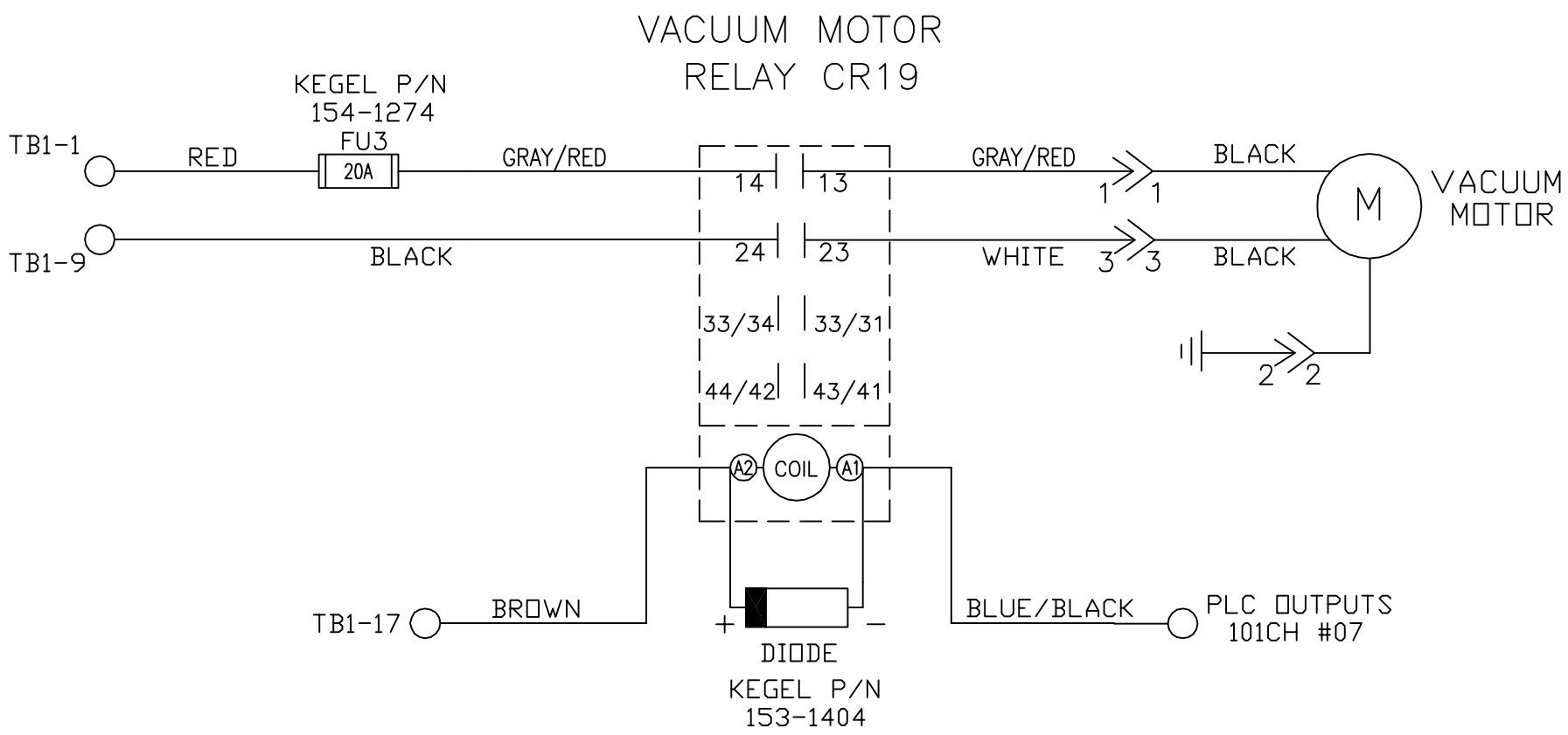


| | | | |
|---|---|---|---|
| MATERIAL: N/A | | THE KEGEL CO. 1951 LONGLEAF BLVD. LAKE WALES, FL 33859 (863) 734-0200 | |
| | | DESCRIPTION: VACUUM MOTOR WIRING | |
| DRAWN BY: SLS | DATE: 07/23/18 | DO NOT SCALE DRAWING | |
| APPROVED: MP | REV DATE: | SIZE: A | QTY/MACHINE: N/A |
| DOC REV: | | SCALE: N/A | PART NUMBER: FLEX WALKER 2019 |
| | | | SHEET: 16 OF 27 |

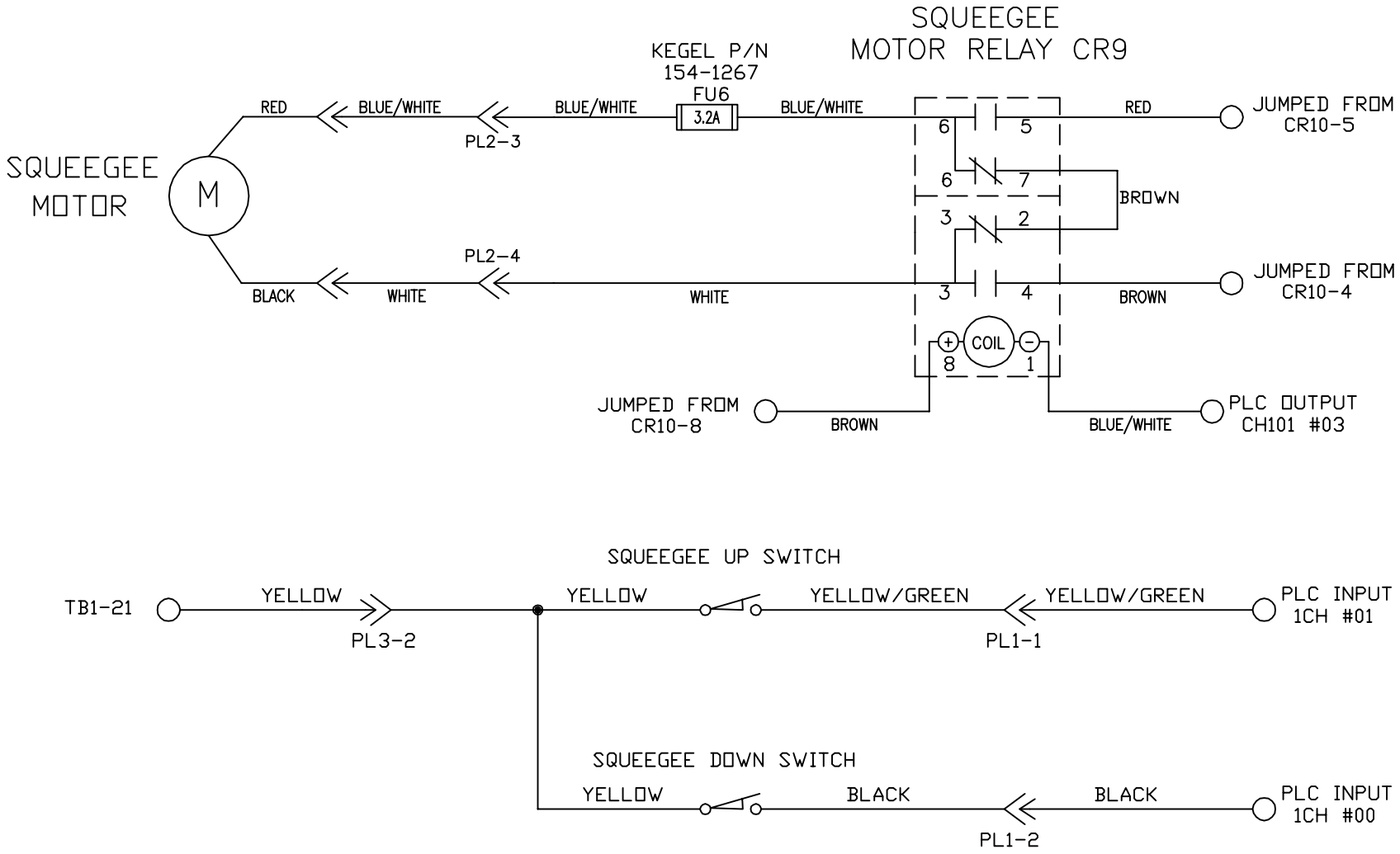


| | | | |
|---|---|---|---|
| MATERIAL: N/A | | THE KEGEL CO. 1951 LONGLEAF BLVD. LAKE WALES, FL 33859 (863) 734-0200 | |
| DRAWN BY: SLS | DATE: 07/23/18 | DESCRIPTION: SQUEEGEE MOTOR & SWITCH WIRING<br>DO NOT SCALE DRAWING | |
| APPROVED: MP | REV DATE: | SIZE: A | QTY/MACHINE: N/A |
| DOC REV: | | SCALE: N/A | PART NUMBER: FLEX WALKER 2019<br>SHEET: 17 OF 27 |

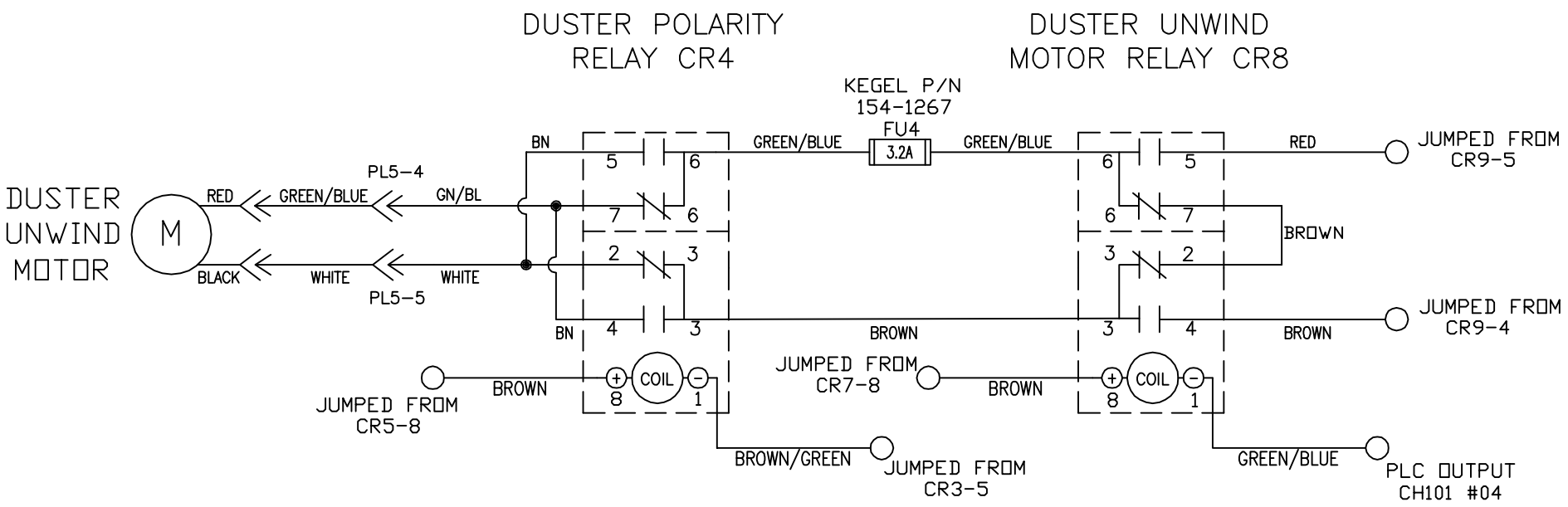


## STOP BY SENSOR

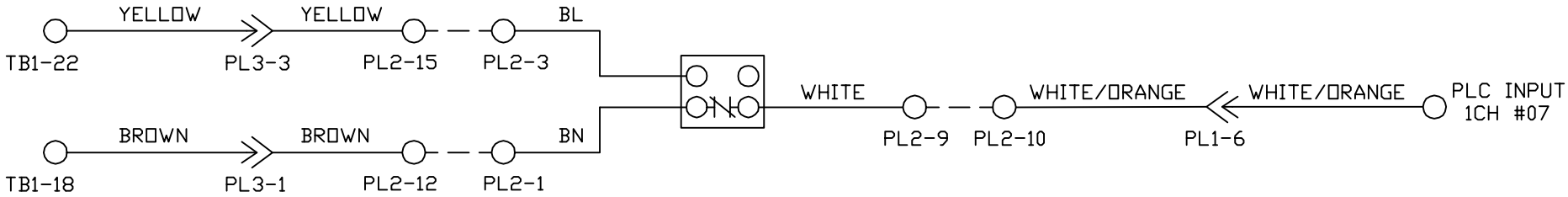


| | | | |
|---|---|---|---|
| MATERIAL: N/A | | THE KEGEL CO. 1951 LONGLEAF BLVD. LAKE WALES, FL 33859 (863) 734-0200 | |
| DRAWN BY: SLS | DATE: 07/23/18 | DESCRIPTION: DUSTER UNWIND & STOP BY SENSOR WIRING DO NOT SCALE DRAWING | |
| APPROVED: MP | REV DATE: | SIZE: A | QTY/MACHINE: N/A |
| DOC REV: | | SCALE: N/A | PART NUMBER: FLEX WALKER 2019 |
| | | | SHEET: 18 OF 27 |

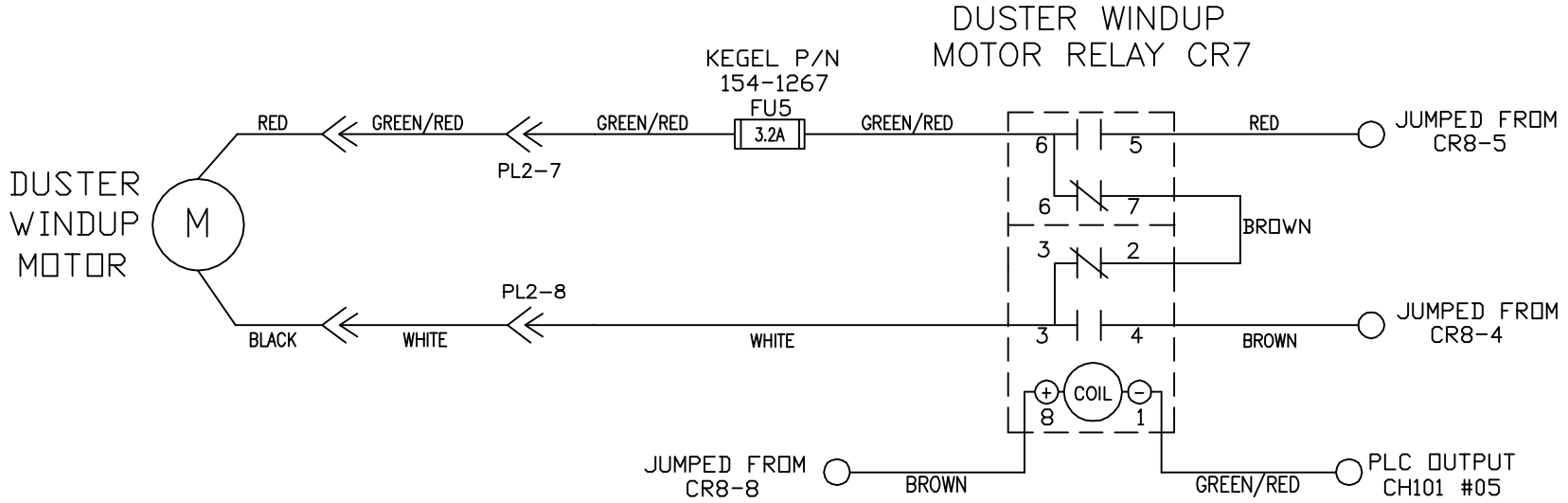


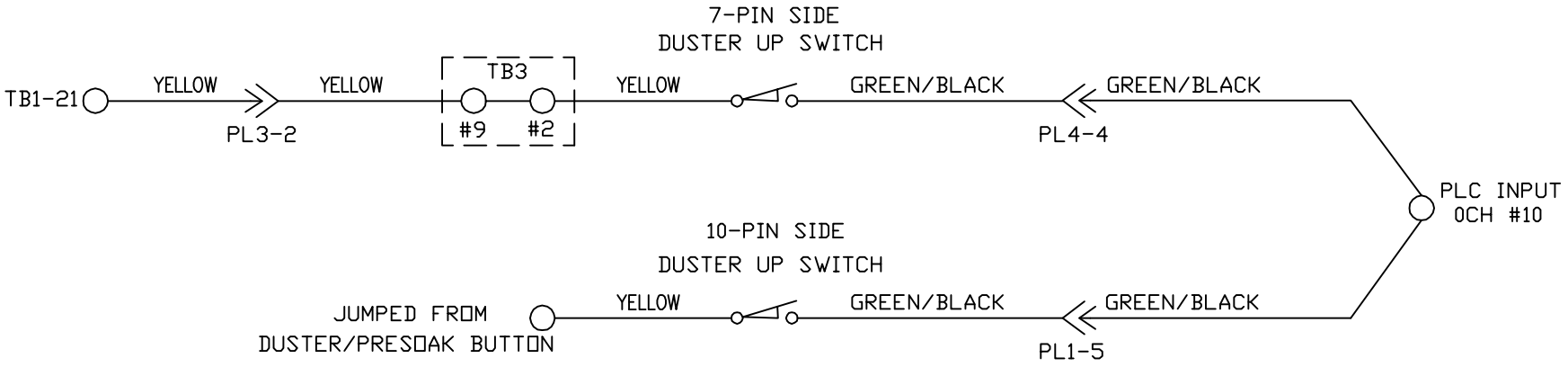


| | | | |
|---|---|---|---|
| MATERIAL: N/A | | THE KEGEL CO. 1951 LONGLEAF BLVD. LAKE WALES, FL 33859 (863) 734-0200 | |
| DRAWN BY: SLS | DATE: 07/23/18 | DESCRIPTION: DUSTER WINDUP & SWITCH WIRING<br>DO NOT SCALE DRAWING | |
| APPROVED: MP | REV DATE: | SIZE: A | QTY/MACHINE: N/A |
| DOC REV: | | SCALE: N/A | PART NUMBER: FLEX WALKER 2019<br>SHEET: 19 OF 27 |

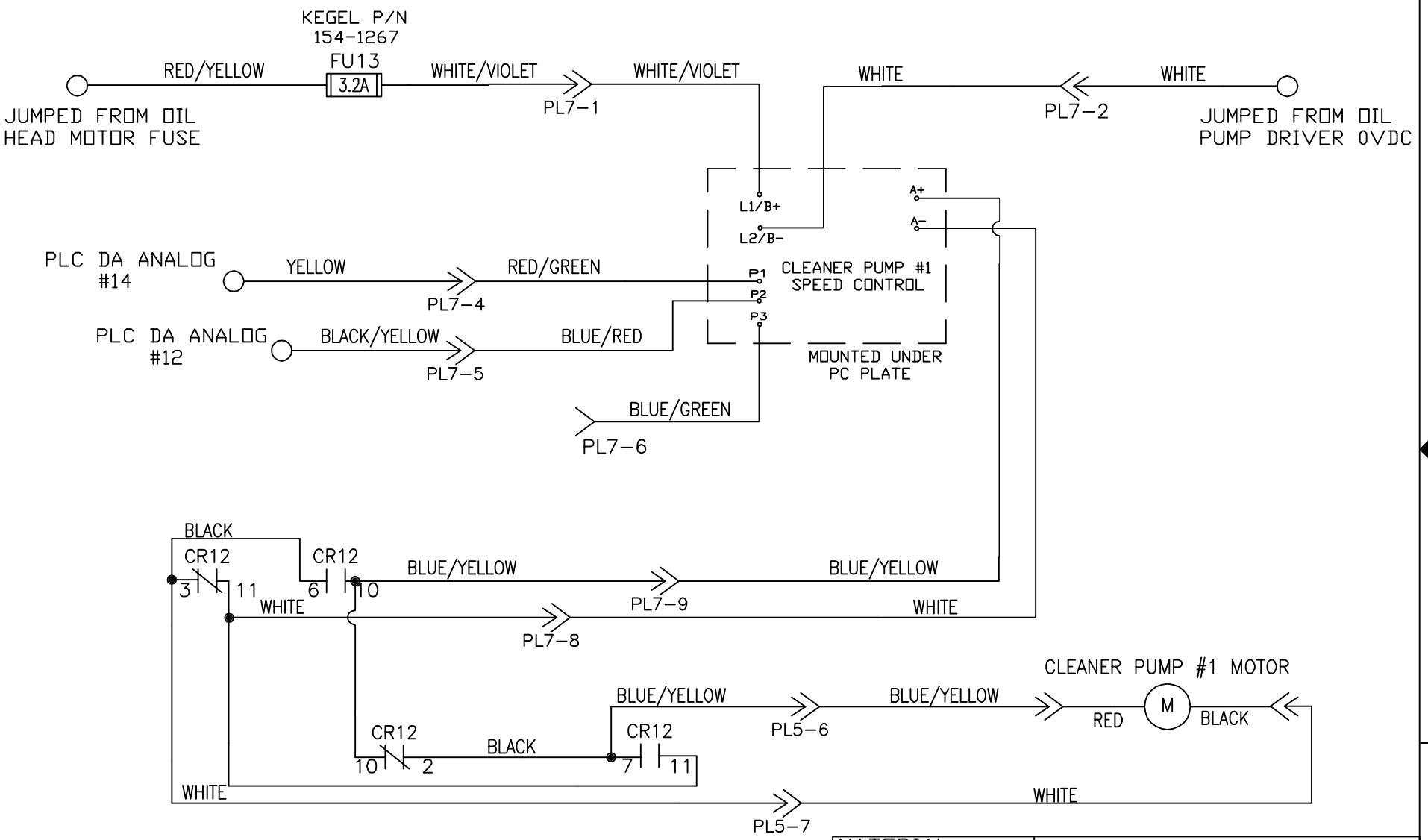


| | | | |
|---|---|---|---|
| MATERIAL: N/A | | THE KEGEL CO. 1951 LONGLEAF BLVD. LAKE WALES, FL 33859 (863) 734-0200 | |
| DRAWN BY: SLS | DATE: 07/23/18 | DESCRIPTION: CLEANER PUMP # 1 SPEED CONTROL WIRING<br>DO NOT SCALE DRAWING | |
| APPROVED: MP | REV DATE: | SIZE: A | QTY/MACHINE: N/A |
| DOC REV: | | PART NUMBER: FLEX WALKER 2019 | |
| | | SCALE: N/A | SHEET: 20 OF 27 |

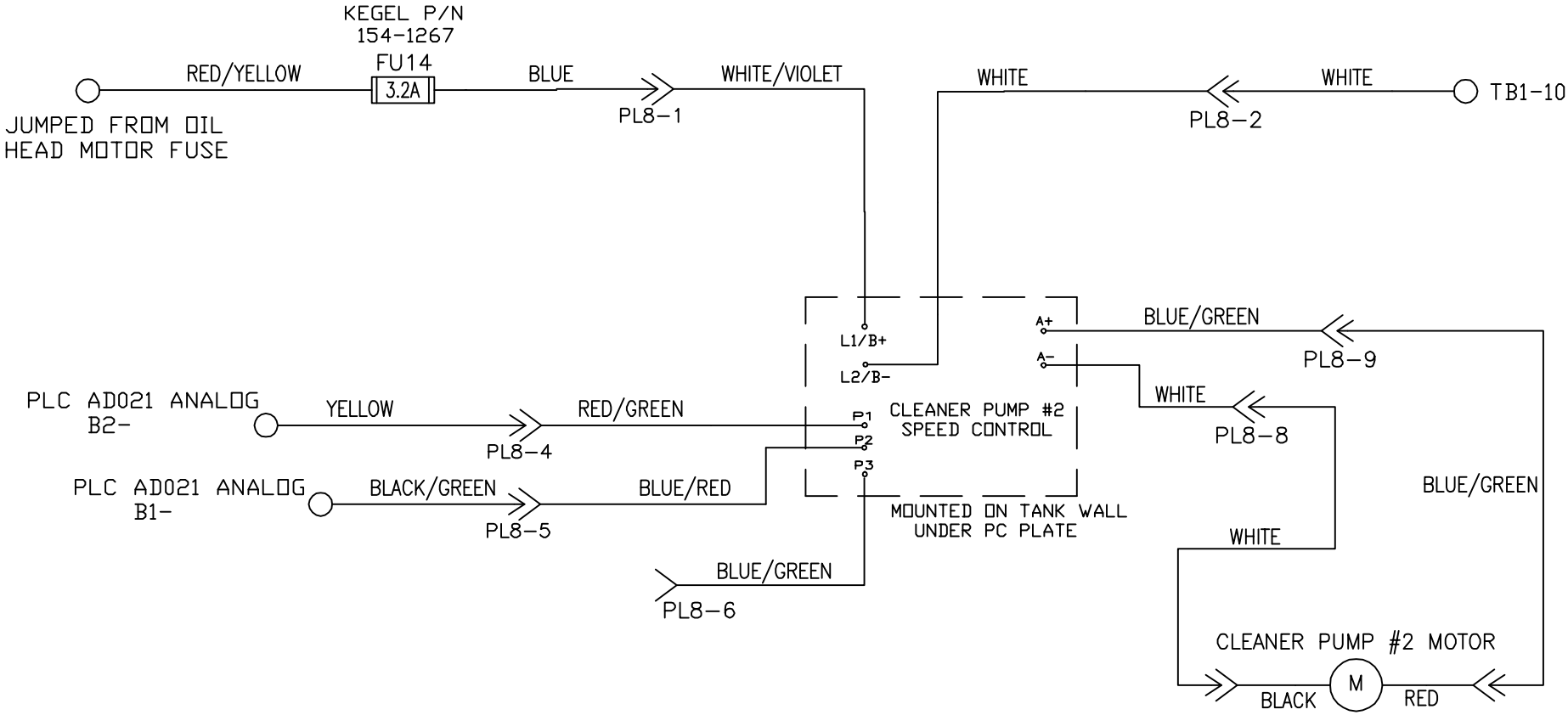


| | | | |
|---|---|---|---|
| MATERIAL: N/A | | THE KEGEL CO. 1951 LONGLEAF BLVD. LAKE WALES, FL 33859 (863) 734-0200 | |
| DRAWN BY: SLS | DATE: 07/23/18 | DESCRIPTION: CLEANER PUMP # 2 SPEED CONTROL WIRING | |
| APPROVED: MP | REV DATE: | DO NOT SCALE DRAWING | |
| DOC REV: | | SIZE: A / QTY/MACHINE: N/A / PART NUMBER: FLEX WALKER 2019 | |
| | | SCALE: N/A | SHEET: 21 OF 27 |

# DUSTER/PRESOAK BUTTON

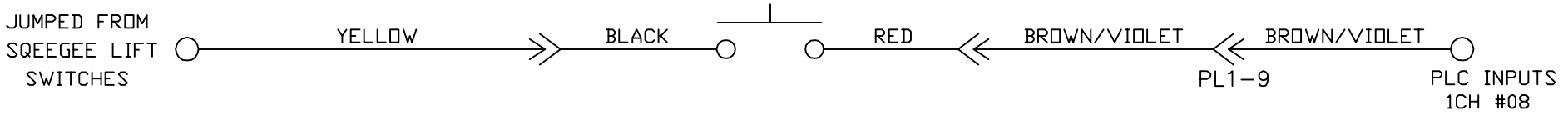


## PIN DECK TREATMENT RELAY CR5

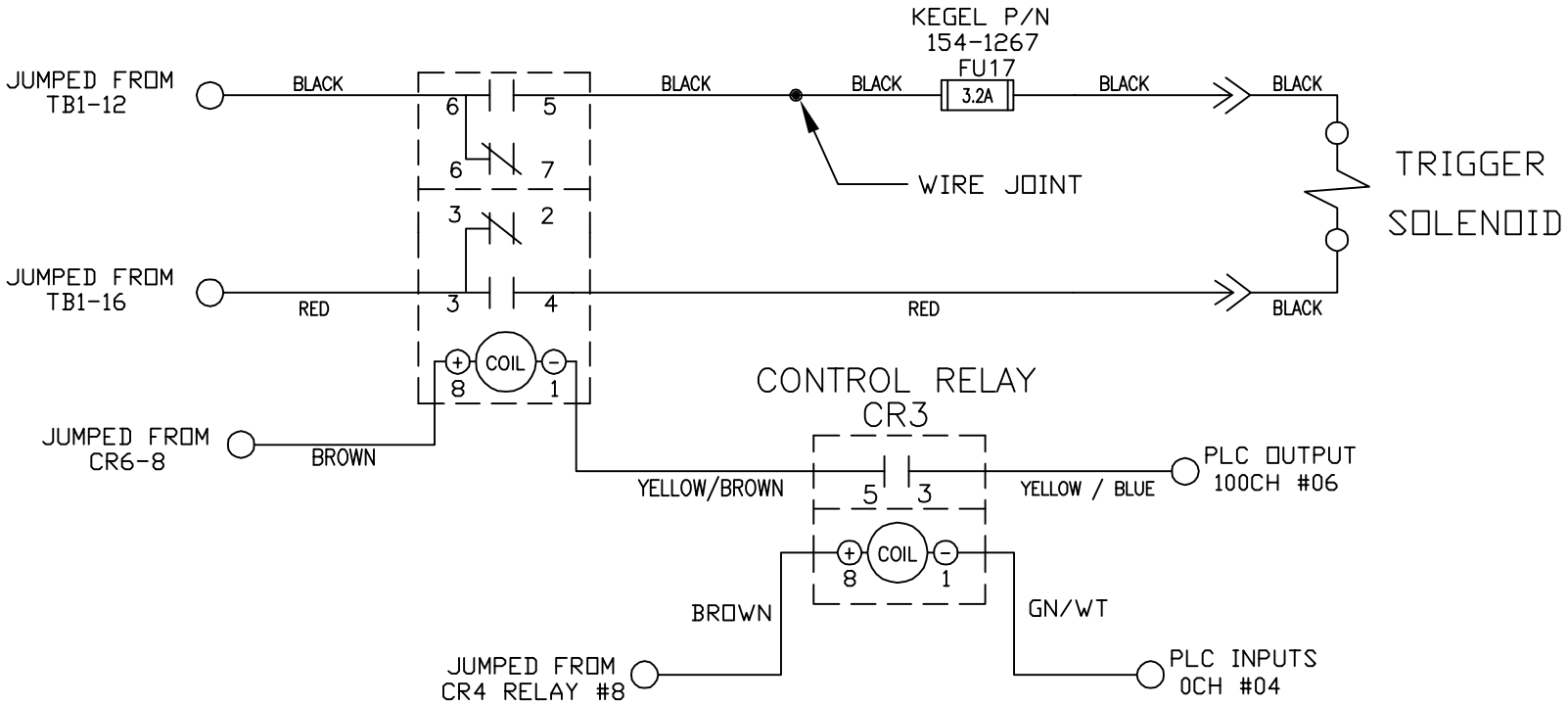


| | | | |
|---|---|---|---|
| MATERIAL: N/A | | THE KEGEL CO. 1951 LONGLEAF BLVD. LAKE WALES, FL 33859 (863) 734-0200 | |
| DRAWN BY: SLS | DATE: 07/23/18 | DESCRIPTION: DUSTER/PRESOAK BUTTON & TRIGGER SOLENOID<br>DO NOT SCALE DRAWING | |
| APPROVED: MP | REV DATE: | SIZE: A | QTY/MACHINE: N/A |
| DOC REV: | | SCALE: N/A | PART NUMBER: FLEX WALKER 2019<br>SHEET: 22 OF 27 |

# DUSTER/PRESOAK BUTTON

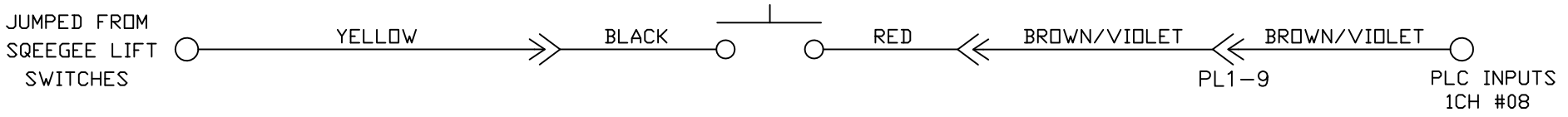


## PIN DECK TREATMENT RELAY CR5

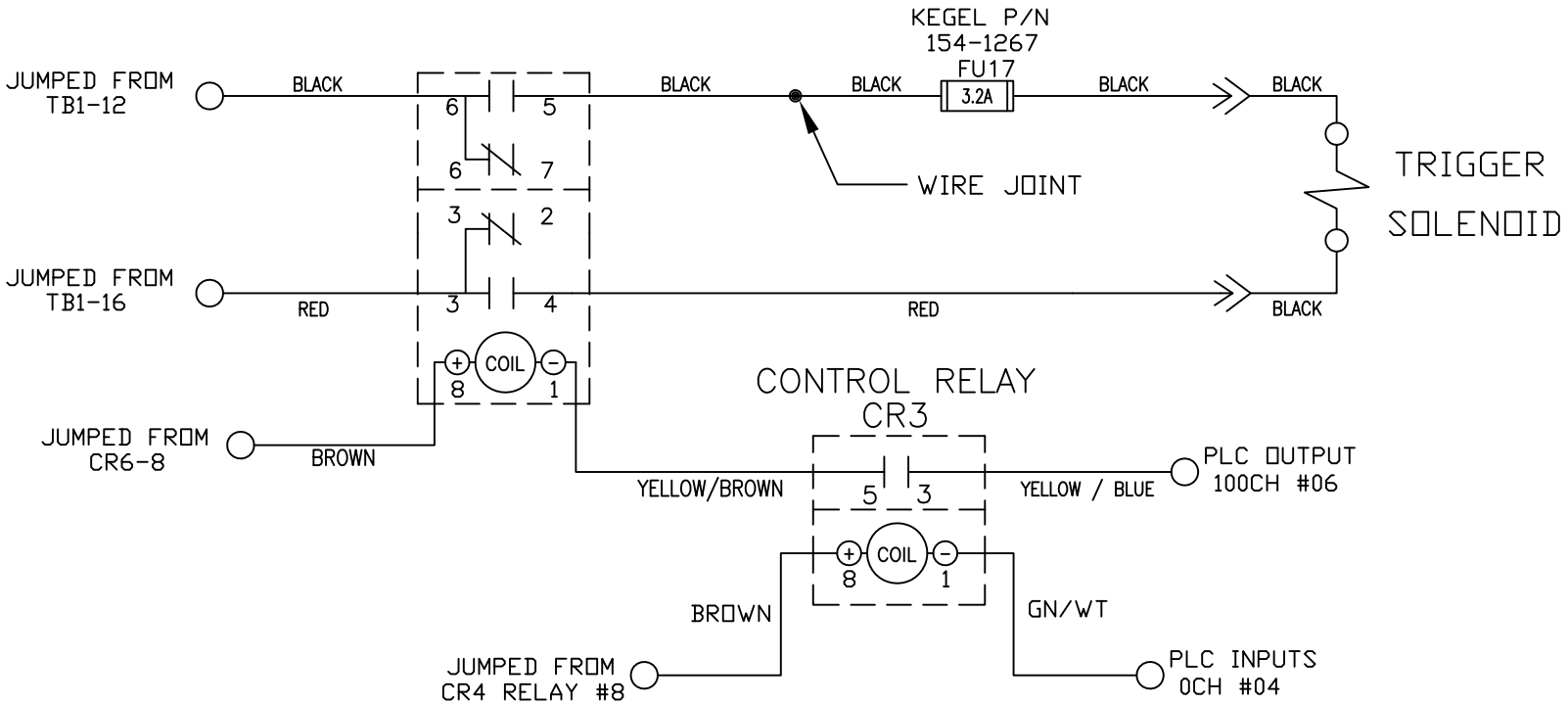


| | | | |
|---|---|---|---|
| MATERIAL: N/A | | THE KEGEL CO. 1951 LONGLEAF BLVD. LAKE WALES, FL 33859 (863) 734-0200 | |
| DRAWN BY: SLS | DATE: 07/21/15 | DESCRIPTION: DUSTER/PRESOAK BUTTON & TRIGGER SOLENOID<br>DO NOT SCALE DRAWING | |
| APPROVED: MP | REV DATE: | SIZE: A | QTY/MACHINE: N/A |
| DOC REV: | | SCALE: N/A | PART NUMBER: FLEX WALKER 2016<br>SHEET: 22 OF 27 |

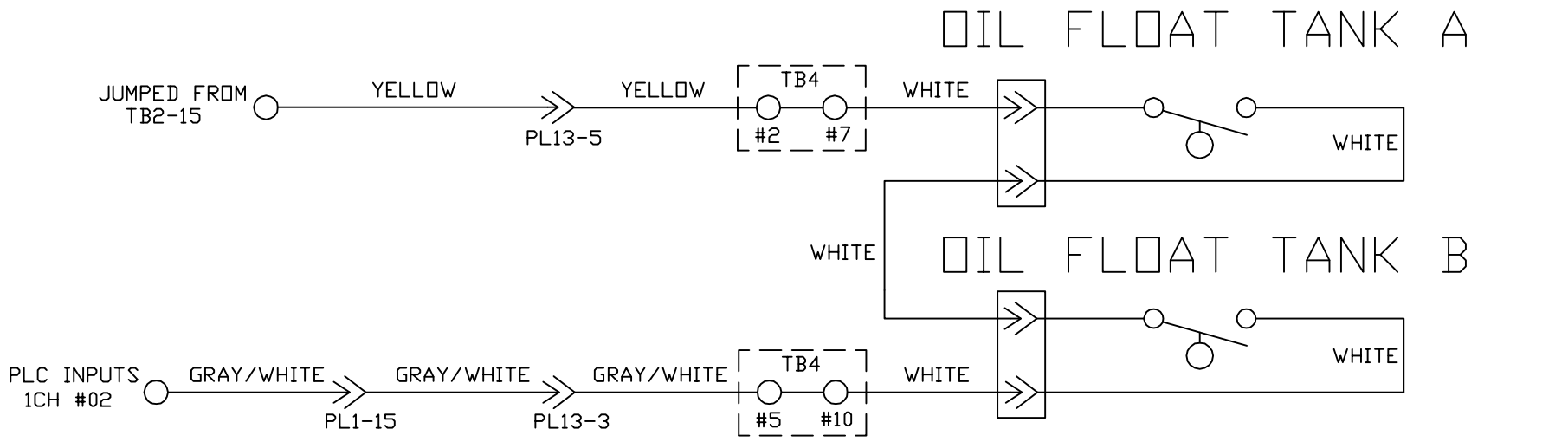


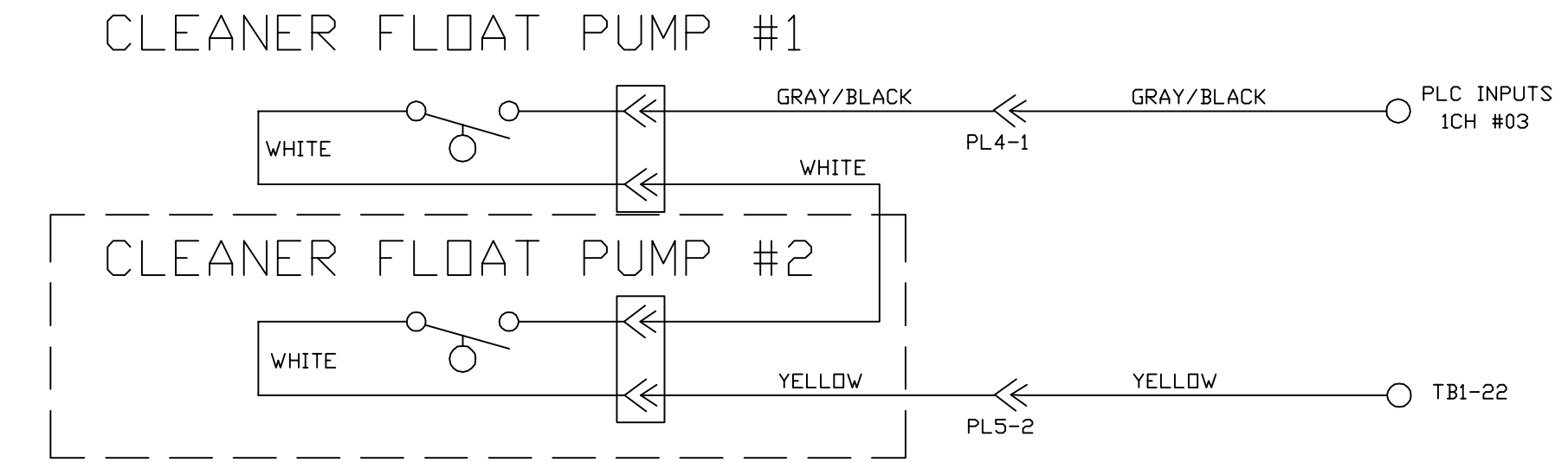


| | | | |
|---|---|---|---|
| MATERIAL N/A | | THE KEGEL CO. 1951 LONGLEAF BLVD. LAKE WALES, FL 33859 (863) 734-0200 | |
| DRAWN BY SLS | DATE 07/23/18 | DESCRIPTION OIL FLOATS & CLEANER FLOATS WIRING DO NOT SCALE DRAWING | |
| APPROVED: MP | REV DATE | SIZE A | QTY/MACHINE N/A | PART NUMBER FLEX WALKER 2019 |
| DOC REV | | SCALE N/A | SHEET 23 OF 27 | |

# SPEED TACH PROX

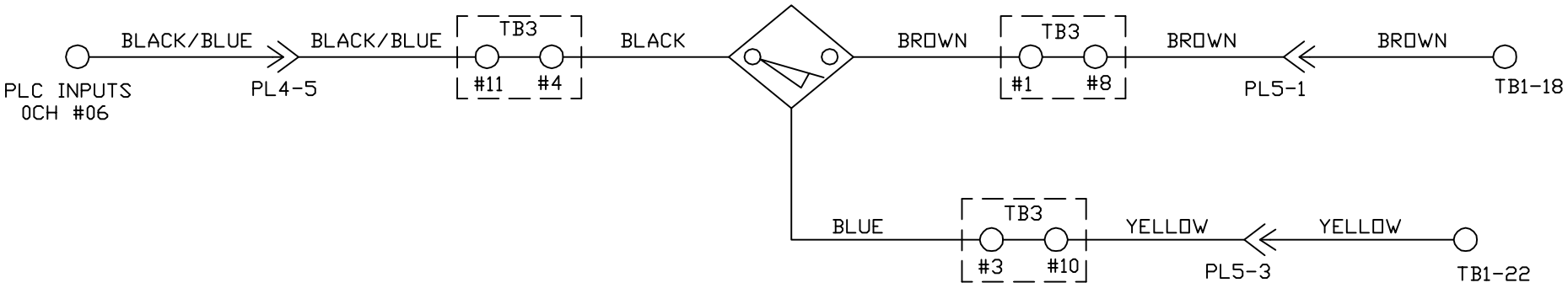


# LANE DISTANCE PROX

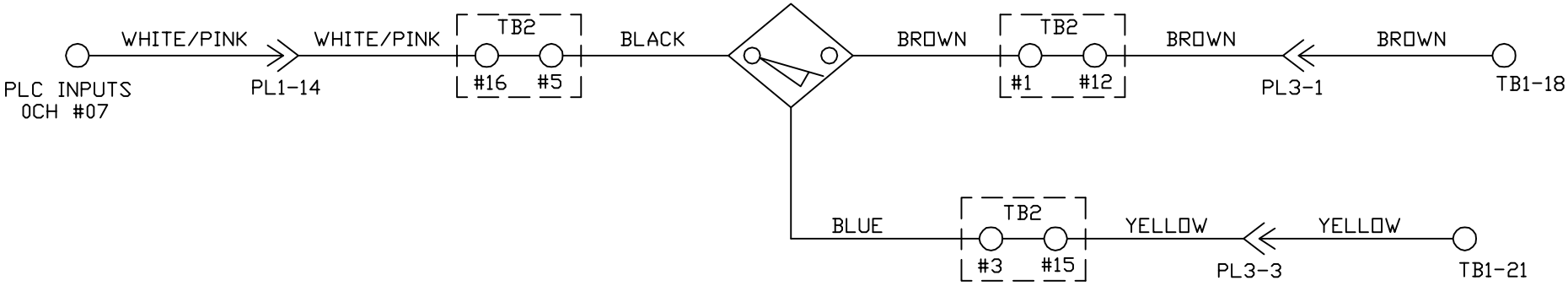


| | | | |
|---|---|---|---|
| MATERIAL N/A | | THE KEGEL CO. 1951 LONGLEAF BLVD. LAKE WALES, FL 33859 (863) 734-0200 | |
| DRAWN BY SLS | DATE 07/23/18 | DESCRIPTION SPEED TACH & LANE DISTANCE WIRING DO NOT SCALE DRAWING | |
| APPROVED: MP | REV DATE | SIZE A | QTY/MACHINE N/A / PART NUMBER FLEX WALKER 2019 |
| DOC REV | | SCALE N/A | SHEET 24 OF 27 |

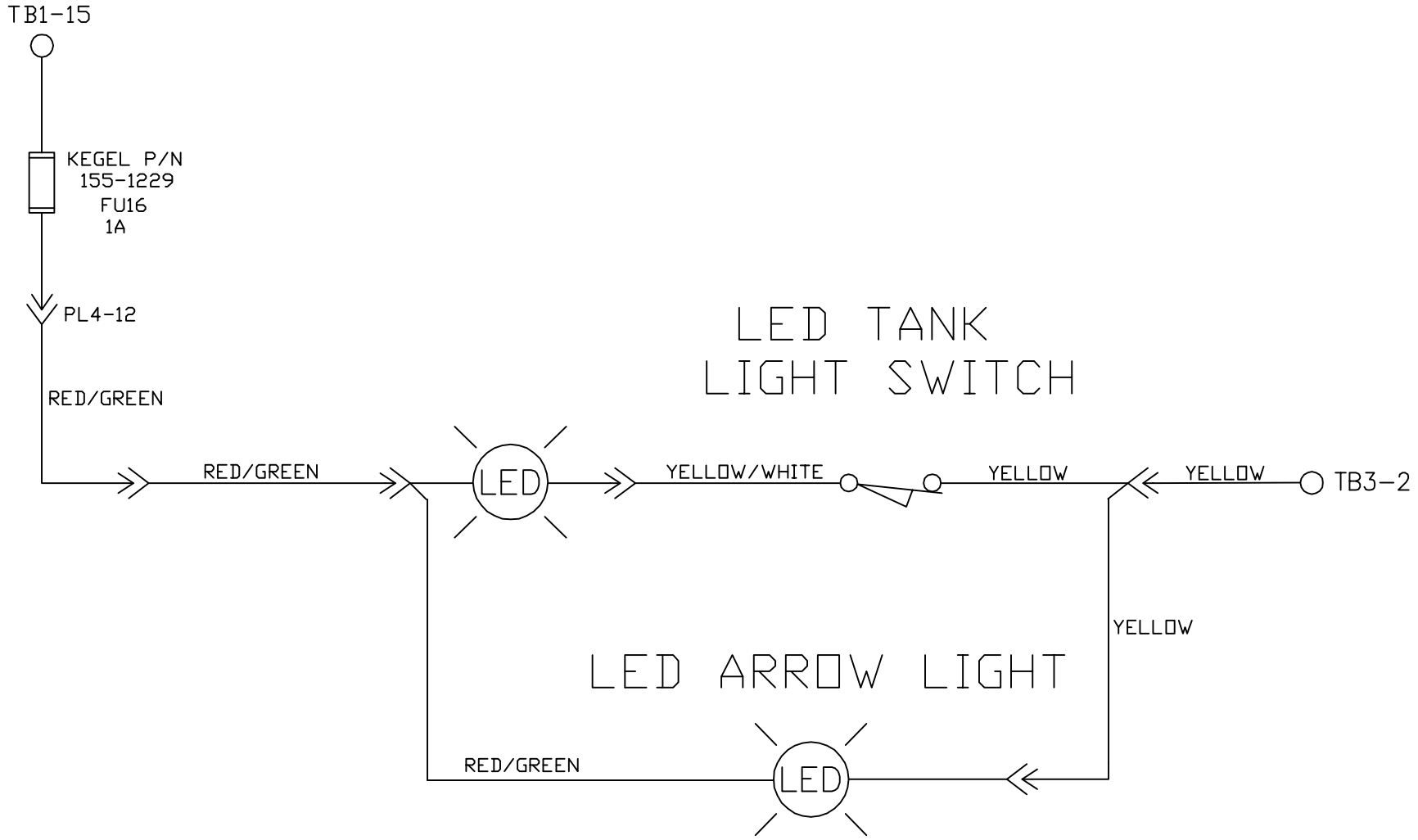


| | | | |
|---|---|---|---|
| MATERIAL: N/A | | THE KEGEL CO. 1951 LONGLEAF BLVD. LAKE WALES, FL 33859 (863) 734-0200 | |
| | | DESCRIPTION: LED TANK LIGHT WIRING | |
| | | DO NOT SCALE DRAWING | |
| DRAWN BY: SLS | DATE: 07/23/18 | SIZE: A | QTY/MACHINE: N/A |
| APPROVED: MP | REV DATE: | PART NUMBER: FLEX WALKER 2019 | |
| DOC REV: | | SCALE: N/A | SHEET: 25 OF 27 |

# ADS PROX 7-PIN SIDE

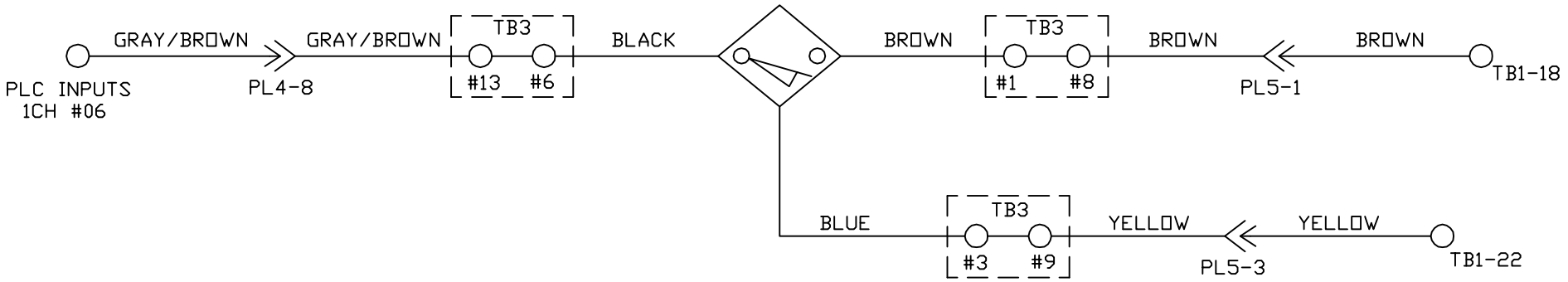


# ADS PROX 10-PIN SIDE

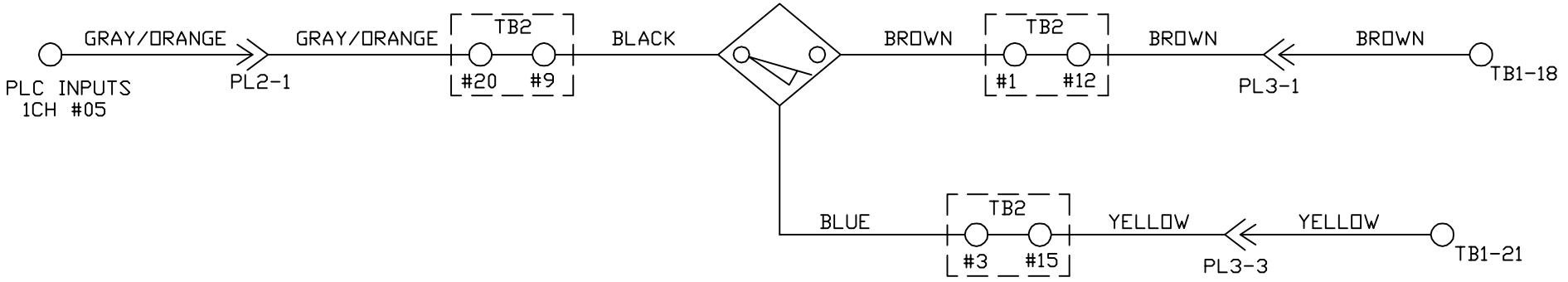


| | | | |
|---|---|---|---|
| MATERIAL: N/A | | THE KEGEL CO. 1951 LONGLEAF BLVD. LAKE WALES, FL 33859 (863) 734-0200 | |
| DRAWN BY: SLS | DATE: 07/23/18 | DESCRIPTION: ADS WIRING 7-PIN & 10-PIN SIDE DO NOT SCALE DRAWING | |
| APPROVED: MP | REV DATE: | SIZE: A | QTY/MACHINE: N/A |
| DOC REV: | | SCALE: N/A | PART NUMBER: FLEX WALKER 2019 |
| | | | SHEET: 26 OF 27 |

# ADS PROX 7-PIN SIDE

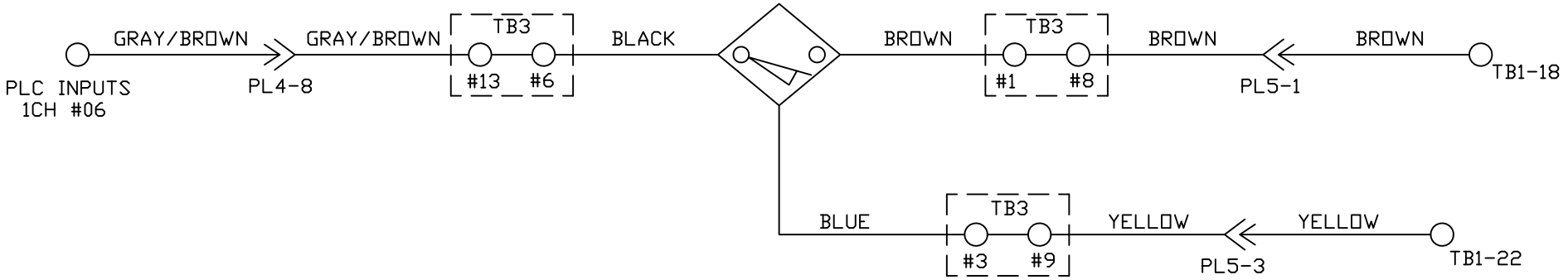


# ADS PROX 10-PIN SIDE

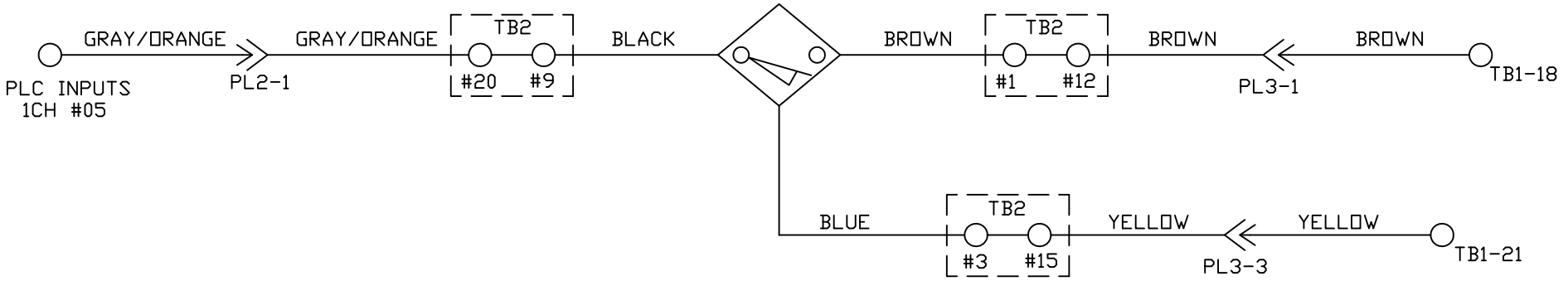


| | | | |
|---|---|---|---|
| MATERIAL: N/A | | THE KEGEL CO. 1951 LONGLEAF BLVD. LAKE WALES, FL 33859 (863) 734-0200 | |
| DRAWN BY: SLS | DATE: 07/21/15 | DESCRIPTION: ADS WIRING 7-PIN & 10-PIN SIDE DO NOT SCALE DRAWING | |
| APPROVED: MP | REV DATE: | SIZE: A | QTY/MACHINE: N/A |
| DOC REV: | | SCALE: N/A | PART NUMBER: FLEX WALKER 2016 |
| | | | SHEET: 26 OF 27 |

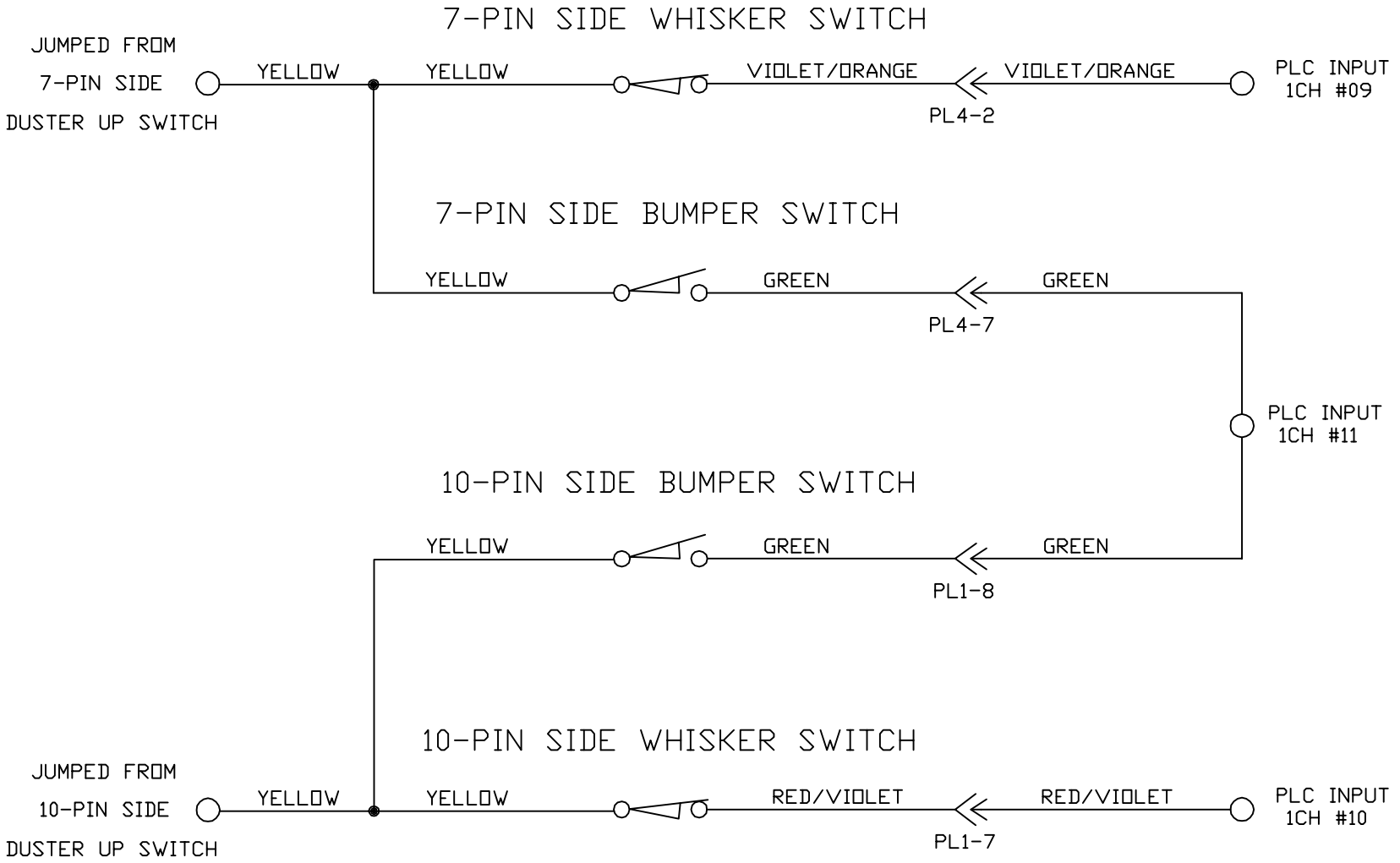


| | | | |
|---|---|---|---|
| MATERIAL: N/A | | THE KEGEL CO. 1951 LONGLEAF BLVD. LAKE WALES, FL 33859 (863) 734-0200 | |
| DRAWN BY: SLS | DATE: 07/23/18 | DESCRIPTION: BUMPER & WHISKER SWITCH WIRING<br>DO NOT SCALE DRAWING | |
| APPROVED: MP | REV DATE: | SIZE: A | QTY/MACHINE: N/A |
| DOC REV: | | SCALE: N/A | PART NUMBER: FLEX WALKER 2019<br>SHEET: 27 OF 27 |

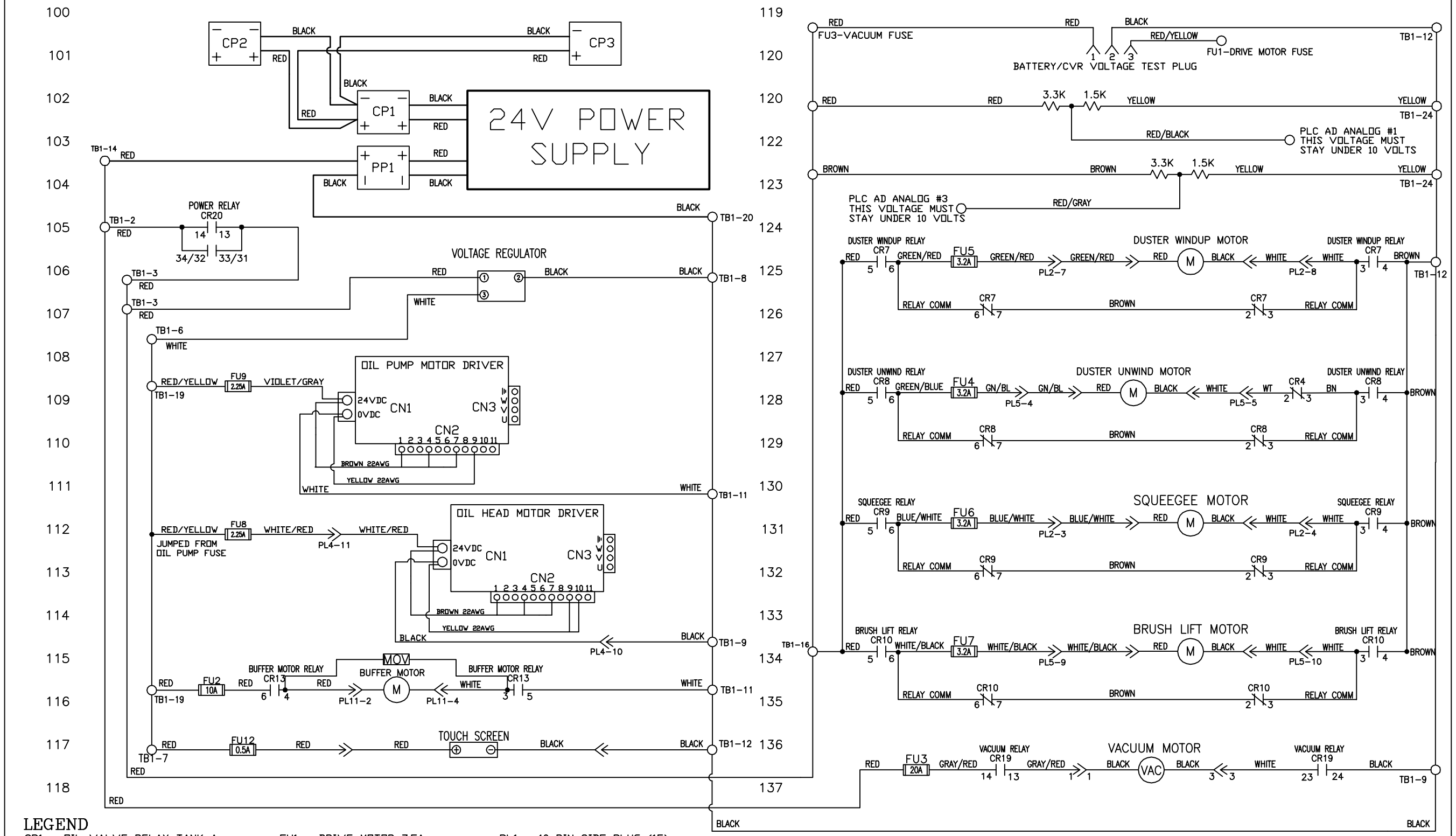


## LEGEND

CR1 - OIL VALVE RELAY TANK A
CR2 - OIL VALVE RELAY TANK B
CR3 - CONTROL RELAY
CR4 - DUSTER POLARITY SWITCH RELAY
CR5 - PIN DECK TREATMENT RELAY
CR6 - POWER OFF RELAY
CR7 - DUSTER WINDUP MOTOR RELAY
CR8 - DUSTER UNWIND MOTOR RELAY
CR9 - SQUEEGEE LIFT MOTOR RELAY
CR10 - BRUSH LIFT MOTOR RELAY
CR11 - FORWARD DRIVE MOTOR RELAY
CR12 - REVERSE DRIVE MOTOR RELAY
CR13 - BUFFER MOTOR RELAY
CR14 - WHISKER ENABLE RELAY
CR15 - WHISKER 7 PIN SIDE RELAY
CR16 - WHISKER 10 PIN SIDE RELAY
CR17 - ZTR ENABLE RELAY
CR18 - ZTR REVERSE RELAY
CR19 - VACUUM MOTOR RELAY
CR20 - POWER RELAY

FU1 - DRIVE MOTOR 7.5A
FU2 - BUFFER MOTOR 10A/20A
FU3 - VACUUM MOTOR 20A
FU4 - DUSTER UNWIND 3.2A
FU5 - DUSTER WINDUP 3.2A
FU6 - SQUEEGEE MOTOR 3.2A
FU7 - BRUSH LIFT MOTOR 3.2A
FU8 - HEAD DRIVE MOTOR 2.25A
FU9 - OIL PUMP MOTOR 2.25A
FU10 - PLC INPUT POWER/L1 0.5A
FU11 - PLC OUTPUT COMMON 0.5A
FU12 - TOUCH SCREEN 0.5A
FU13 - CLEANER PUMP #1 3.2A
FU14 - CLEANER PUMP #2 3.2A
FU15 - CVR POWER 25A/30A
FU16 - LED LIGHTS 1A
FU17 - TRIGGER SOLENOID 3.2A

PL1 - 10-PIN SIDE PLUG (15)
PL2 - 10-PIN SIDE PLUG (12)
PL3 - 10-PIN SIDE PLUG (9)
PL4 - 7-PIN SIDE PLUG (15)
PL5 - 7-PIN SIDE PLUG (12)
PL6 - DRIVE SPEED BOARD PLUG (12)
PL7 - CLEANER PUMP #1 SPEED BOARD PLUG (9)
PL8 - CLEANER PUMP #2 SPEED BOARD PLUG (9)
PL9 - ZTR DRIVE MOTOR PLUG (3)
PL10 - BUFFER SPEED BOARD PLUG (12)
PL11 - BUFFER MOTOR PLUG (5)
PL12 - BUFFER MOTOR VARIABLE SPEED PLUG (5)
PL13 - OIL PLATE ASSEMBLY PLUG (6)

TB1 - TERMINAL BLOCK 1 (MAIN)
TB2 - TERMINAL BLOCK 2 (10-PIN SIDE)
TB3 - TERMINAL BLOCK 3 (7-PIN SIDE)
TB4 - TERMINAL BLOCK 4 (OIL PLATE)
TB5 - TERMINAL BLOCK 5 (TOP PLC PLATE)

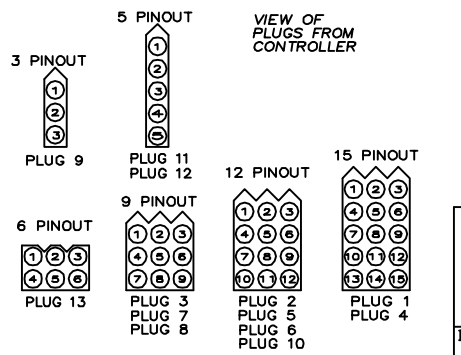


CP1 - CHARGING PLUG BATTERY (BLUE)
CP2 - CHARGING PLUG INSIDE (BLUE)
CP3 - CHARGING PLUG OUTSIDE (BLUE)
PP1 - POWER PLUG (RED)

| | | | |
|---|---|---|---|
| MATERIAL N/A | | KEGEL | 1951 LONGLEAF BLVD. LAKE WALES, FL 33859 (863) 734-0200 |
| | | DESCRIPTION MOTOR WIRING SCHEMATIC | |
| | | DO NOT SCALE DRAWING | |
| DRAWN BY SLS | DATE 07/23/18 | SIZE C | QTY/MACHINE N/A | PART NUMBER FLEX WALKER 2019 |
| APPROVED: MP | REV DATE | SCALE N/A | SHEET 1 OF 27 |
| DOC REV | | | |

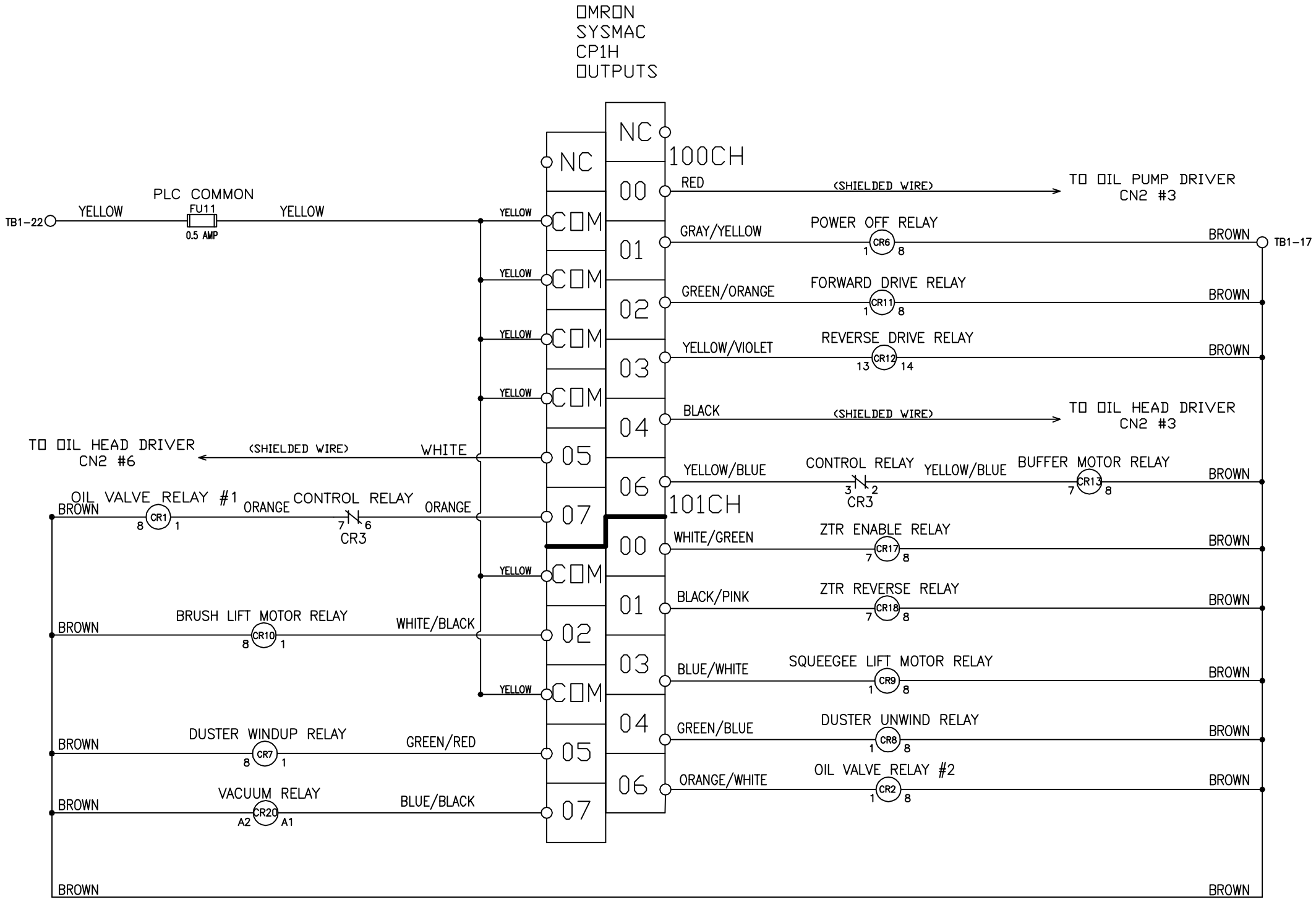


## LEGEND

CR1 - OIL VALVE RELAY TANK A
CR2 - OIL VALVE RELAY TANK B
CR3 - CONTROL RELAY
CR4 - DUSTER POLARITY SWITCH RELAY
CR5 - PIN DECK TREATMENT RELAY
CR6 - POWER OFF RELAY
CR7 - DUSTER WINDUP MOTOR RELAY
CR8 - DUSTER UNWIND MOTOR RELAY
CR9 - SQUEEGEE LIFT MOTOR RELAY
CR10 - BRUSH LIFT MOTOR RELAY
CR11 - FORWARD DRIVE MOTOR RELAY
CR12 - REVERSE DRIVE MOTOR RELAY
CR13 - BUFFER MOTOR RELAY
CR14 - WHISKER ENABLE RELAY
CR15 - WHISKER 7 PIN SIDE RELAY
CR16 - WHISKER 10 PIN SIDE RELAY
CR17 - ZTR ENABLE RELAY
CR18 - ZTR REVERSE RELAY
CR19 - VACUUM MOTOR RELAY
CR20 - POWER RELAY

FU1 - DRIVE MOTOR 7.5A
FU2 - BUFFER MOTOR 10A/20A
FU3 - VACUUM MOTOR 20A
FU4 - DUSTER UNWIND 3.2A
FU5 - DUSTER WINDUP 3.2A
FU6 - SQUEEGEE MOTOR 3.2A
FU7 - BRUSH LIFT MOTOR 3.2A
FU8 - HEAD DRIVE MOTOR 2.25A
FU9 - OIL PUMP MOTOR 2.25A
FU10 - PLC INPUT POWER/L1 0.5A
FU11 - PLC OUTPUT COMMON 0.5A
FU12 - TOUCH SCREEN 0.5A
FU13 - CLEANER PUMP #1 3.2A
FU14 - CLEANER PUMP #2 3.2A
FU15 - CVR POWER 25A/30A
FU16 - LED LIGHTS 1A
FU17 - TRIGGER SOLENOID 3.2A

PL1 - 10-PIN SIDE PLUG (15)
PL2 - 10-PIN SIDE PLUG (12)
PL3 - 10-PIN SIDE PLUG (9)
PL4 - 7-PIN SIDE PLUG (15)
PL5 - 7-PIN SIDE PLUG (12)
PL6 - DRIVE SPEED BOARD PLUG (12)
PL7 - CLEANER PUMP #1 SPEED BOARD PLUG (9)
PL8 - CLEANER PUMP #2 SPEED BOARD PLUG (9)
PL9 - ZTR DRIVE MOTOR PLUG (3)
PL10 - BUFFER SPEED BOARD PLUG (12)
PL11 - BUFFER MOTOR PLUG (5)
PL12 - BUFFER MOTOR VARIABLE SPEED PLUG (5)
PL13 - OIL PLATE ASSEMBLY PLUG (6)

TB1 - TERMINAL BLOCK 1 (MAIN)
TB2 - TERMINAL BLOCK 2 (10-PIN SIDE)
TB3 - TERMINAL BLOCK 3 (7-PIN SIDE)
TB4 - TERMINAL BLOCK 4 (OIL PLATE)
TB5 - TERMINAL BLOCK 5 (TOP PLC PLATE)

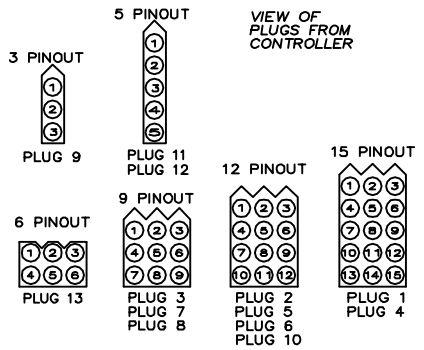


CP1 - CHARGING PLUG BATTERY (BLUE)
CP2 - CHARGING PLUG INSIDE (BLUE)
CP3 - CHARGING PLUG OUTSIDE (BLUE)
PP1 - POWER PLUG (RED)

| | | | |
|---|---|---|---|
| MATERIAL: N/A | | KEGEL | 1951 LONGLEAF BLVD. LAKE WALES, FL 33859 (863) 734-0200 |
| | | DESCRIPTION: OUTPUT WIRING SCHEMATIC | |
| | | DO NOT SCALE DRAWING | |
| DRAWN BY: SLS | DATE: 07/23/18 | | |
| APPROVED: MP | REV DATE: | SIZE: C / QTY/MACHINE: N/A / PART NUMBER: FLEX WALKER 2019 | |
| DOC REV: | | SCALE: N/A | SHEET: 2 OF 27 |

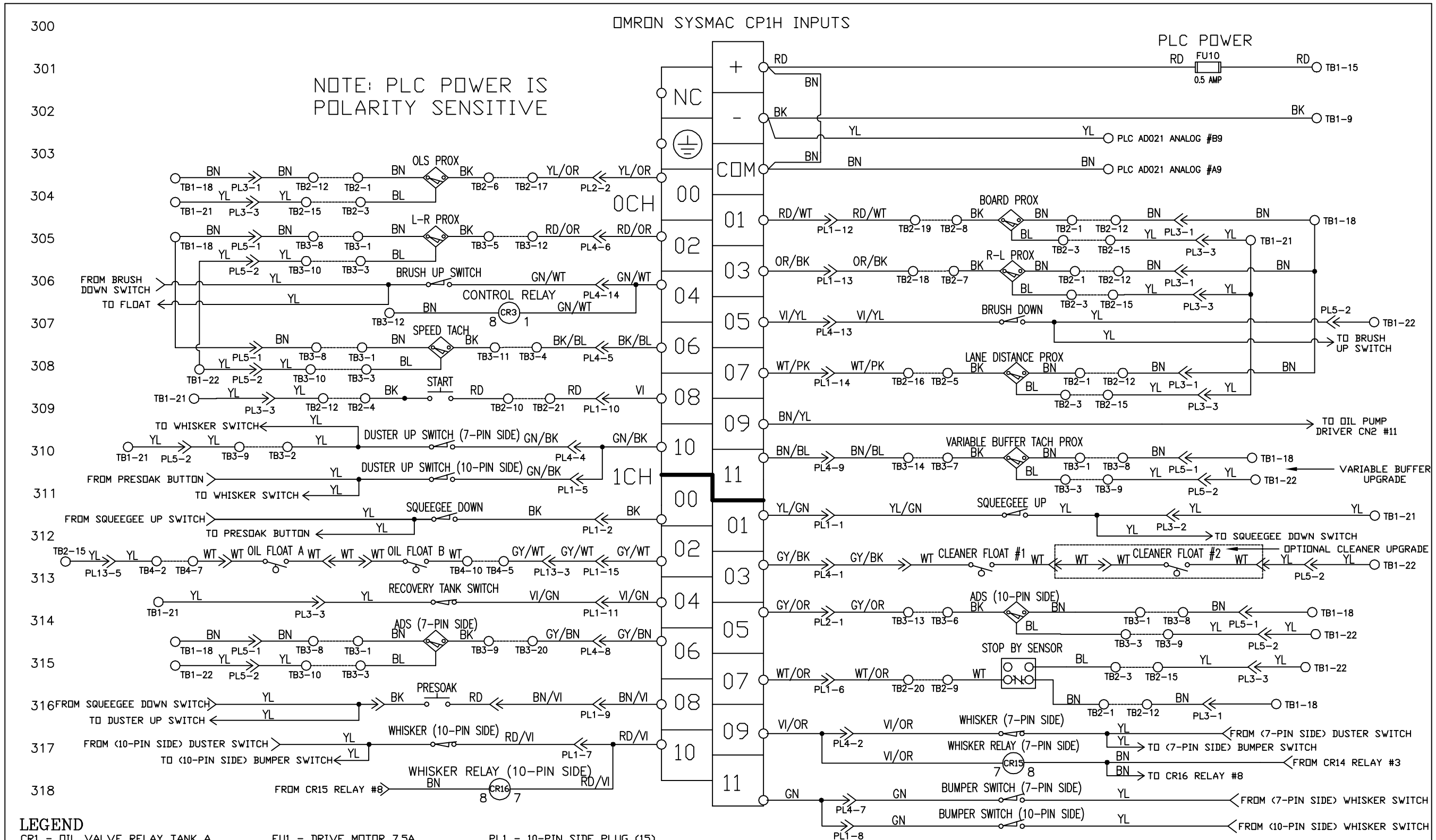


## LEGEND

CR1 - OIL VALVE RELAY TANK A
CR2 - OIL VALVE RELAY TANK B
CR3 - CONTROL RELAY
CR4 - DUSTER POLARITY SWITCH RELAY
CR5 - PIN DECK TREATMENT RELAY
CR6 - POWER OFF RELAY
CR7 - DUSTER WINDUP MOTOR RELAY
CR8 - DUSTER UNWIND MOTOR RELAY
CR9 - SQUEEGEE LIFT MOTOR RELAY
CR10 - BRUSH LIFT MOTOR RELAY
CR11 - FORWARD DRIVE MOTOR RELAY
CR12 - REVERSE DRIVE MOTOR RELAY
CR13 - BUFFER MOTOR RELAY
CR14 - WHISKER ENABLE RELAY
CR15 - WHISKER 7 PIN SIDE RELAY
CR16 - WHISKER 10 PIN SIDE RELAY
CR17 - ZTR ENABLE RELAY
CR18 - ZTR REVERSE RELAY
CR19 - VACUUM MOTOR RELAY
CR20 - POWER RELAY

FU1 - DRIVE MOTOR 7.5A
FU2 - BUFFER MOTOR 10A/20A
FU3 - VACUUM MOTOR 20A
FU4 - DUSTER UNWIND 3.2A
FU5 - DUSTER WINDUP 3.2A
FU6 - SQUEEGEE MOTOR 3.2A
FU7 - BRUSH LIFT MOTOR 3.2A
FU8 - HEAD DRIVE MOTOR 2.25A
FU9 - OIL PUMP MOTOR 2.25A
FU10 - PLC INPUT POWER/L1 0.5A
FU11 - PLC OUTPUT COMMON 0.5A
FU12 - TOUCH SCREEN 0.5A
FU13 - CLEANER PUMP #1 3.2A
FU14 - CLEANER PUMP #2 3.2A
FU15 - CVR POWER 25A/30A
FU16 - LED LIGHTS 1A
FU17 - TRIGGER SOLENOID 3.2A

PL1 - 10-PIN SIDE PLUG (15)
PL2 - 10-PIN SIDE PLUG (12)
PL3 - 10-PIN SIDE PLUG (9)
PL4 - 7-PIN SIDE PLUG (15)
PL5 - 7-PIN SIDE PLUG (12)
PL6 - DRIVE SPEED BOARD PLUG (12)
PL7 - CLEANER PUMP #1 SPEED BOARD PLUG (9)
PL8 - CLEANER PUMP #2 SPEED BOARD PLUG (9)
PL9 - ZTR DRIVE MOTOR PLUG (3)
PL10 - BUFFER SPEED BOARD PLUG (12)
PL11 - BUFFER MOTOR PLUG (5)
PL12 - BUFFER MOTOR VARIABLE SPEED PLUG (5)
PL13 - OIL PLATE ASSEMBLY PLUG (6)

TB1 - TERMINAL BLOCK 1 (MAIN)
TB2 - TERMINAL BLOCK 2 (10-PIN SIDE)
TB3 - TERMINAL BLOCK 3 (7-PIN SIDE)
TB4 - TERMINAL BLOCK 4 (OIL PLATE)
TB5 - TERMINAL BLOCK 5 (TOP PLC PLATE)

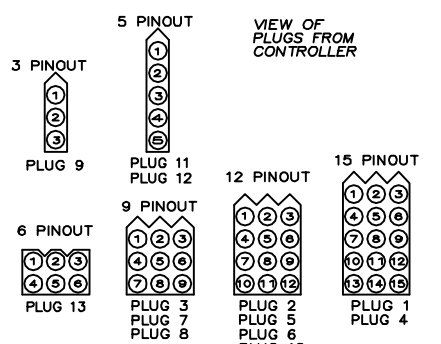


CP1 - CHARGING PLUG BATTERY (BLUE)
CP2 - CHARGING PLUG INSIDE (BLUE)
CP3 - CHARGING PLUG OUTSIDE (BLUE)
PP1 - POWER PLUG (RED)

| | | | |
|---|---|---|---|
| MATERIAL N/A | KEGEL | 1951 LONGLEAF BLVD. LAKE WALES, FL 33859 (863) 734-0200 | |
| | DESCRIPTION INPUT WIRING SCHEMATIC | | |
| | DO NOT SCALE DRAWING | | |
| DRAWN BY SLS | DATE 07/23/18 | SIZE C | QTY/MACHINE |
| APPROVED: MP | REV DATE | PART NUMBER FLEX WALKER 2019 | |
| DOC REV | | SCALE N/A | SHEET 3 OF 27 |

## SCHEMATIC FOR RESISTOR WIRE ON MAIN DRIVE MOTOR

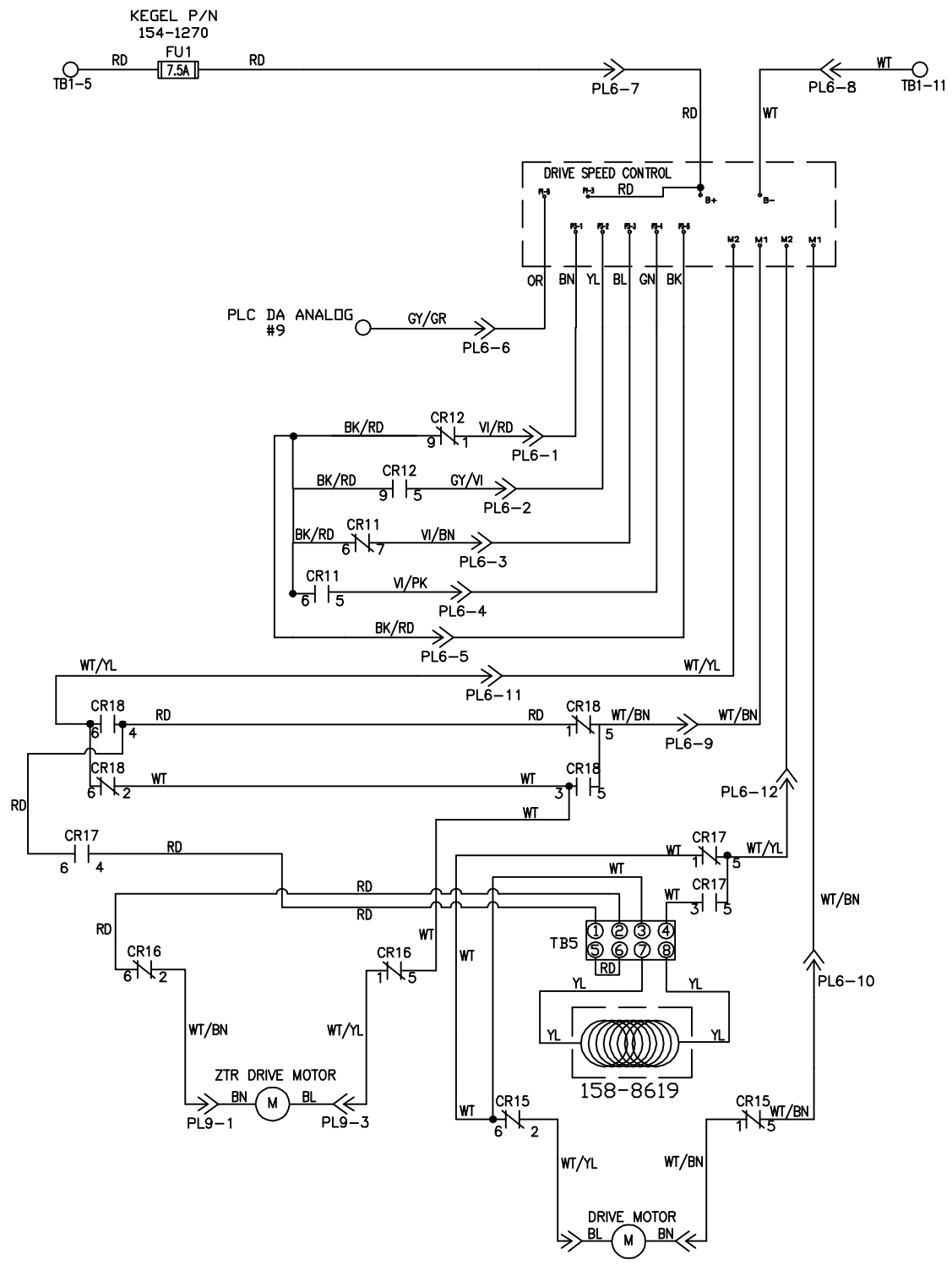


## SCHEMATIC FOR RESISTOR WIRE ON ZTR DRIVE MOTOR

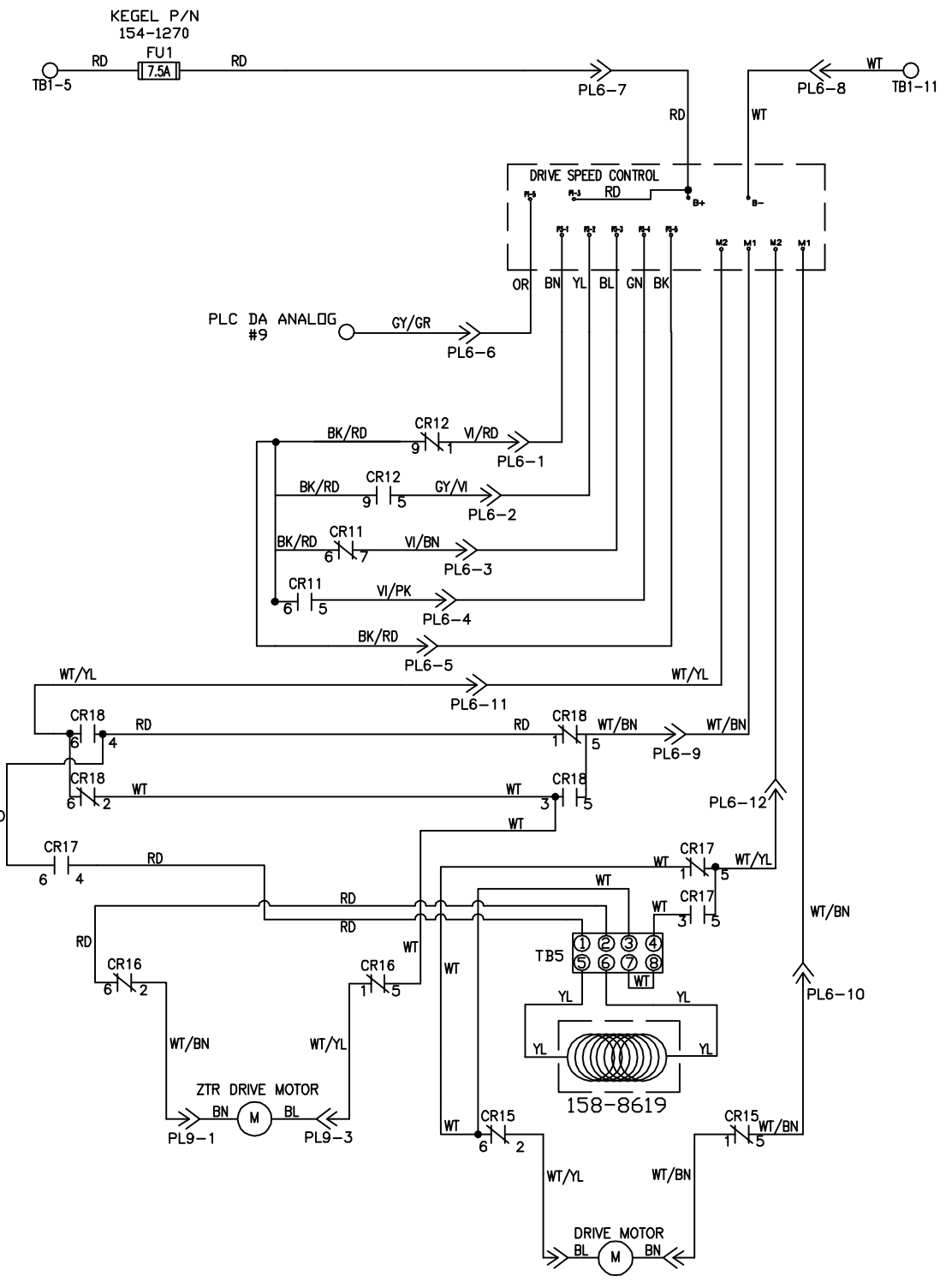


## LEGEND

CR1 - OIL VALVE RELAY TANK A
CR2 - OIL VALVE RELAY TANK B
CR3 - CONTROL RELAY
CR4 - DUSTER POLARITY SWITCH RELAY
CR5 - PIN DECK TREATMENT RELAY
CR6 - POWER OFF RELAY
CR7 - DUSTER WINDUP MOTOR RELAY
CR8 - DUSTER UNWIND MOTOR RELAY
CR9 - SQUEEGEE LIFT MOTOR RELAY
CR10 - BRUSH LIFT MOTOR RELAY
CR11 - FORWARD DRIVE MOTOR RELAY
CR12 - REVERSE DRIVE MOTOR RELAY
CR13 - BUFFER MOTOR RELAY
CR14 - WHISKER ENABLE RELAY
CR15 - WHISKER 7 PIN SIDE RELAY
CR16 - WHISKER 10 PIN SIDE RELAY
CR17 - ZTR ENABLE RELAY
CR18 - ZTR REVERSE RELAY
CR19 - VACUUM MOTOR RELAY
CR20 - POWER RELAY

FU1 - DRIVE MOTOR 7.5A
FU2 - BUFFER MOTOR 10A/20A
FU3 - VACUUM MOTOR 20A
FU4 - DUSTER UNWIND 3.2A
FU5 - DUSTER WINDUP 3.2A
FU6 - SQUEEGEE MOTOR 3.2A
FU7 - BRUSH LIFT MOTOR 3.2A
FU8 - HEAD DRIVE MOTOR 2.25A
FU9 - OIL PUMP MOTOR 2.25A
FU10 - PLC INPUT POWER/L1 0.5A
FU11 - PLC OUTPUT COMMON 0.5A
FU12 - TOUCH SCREEN 0.5A
FU13 - CLEANER PUMP #1 3.2A
FU14 - CLEANER PUMP #2 3.2A
FU15 - CVR POWER 25A/30A
FU16 - LED LIGHTS 1A
FU17 - TRIGGER SOLENOID 3.2A

PL1 - 10-PIN SIDE PLUG (15)
PL2 - 10-PIN SIDE PLUG (12)
PL3 - 10-PIN SIDE PLUG (9)
PL4 - 7-PIN SIDE PLUG (15)
PL5 - 7-PIN SIDE PLUG (12)
PL6 - DRIVE SPEED BOARD PLUG (12)
PL7 - CLEANER PUMP #1 SPEED BOARD PLUG (9)
PL8 - CLEANER PUMP #2 SPEED BOARD PLUG (9)
PL9 - ZTR DRIVE MOTOR PLUG (3)
PL10 - BUFFER SPEED BOARD PLUG (12)
PL11 - BUFFER MOTOR PLUG (5)
PL12 - BUFFER MOTOR VARIABLE SPEED PLUG (5)
PL13 - OIL PLATE ASSEMBLY PLUG (6)

TB1 - TERMINAL BLOCK 1 (MAIN)
TB2 - TERMINAL BLOCK 2 (10-PIN SIDE)
TB3 - TERMINAL BLOCK 3 (7-PIN SIDE)
TB4 - TERMINAL BLOCK 4 (OIL PLATE)
TB5 - TERMINAL BLOCK 5 (TOP PLC PLATE)

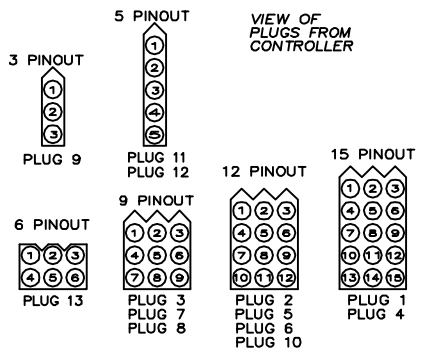


CP1 - CHARGING PLUG BATTERY (BLUE)
CP2 - CHARGING PLUG INSIDE (BLUE)
CP3 - CHARGING PLUG OUTSIDE (BLUE)
PP1 - POWER PLUG (RED)

| | | | |
|---|---|---|---|
| MATERIAL N/A | | KEGEL | 1951 LONGLEAF BLVD. LAKE WALES, FL 33859 (863) 734-0200 |
| | | DESCRIPTION SPEED CONTROL SCHEMATIC | |
| | | DO NOT SCALE DRAWING | |
| DRAWN BY SLS | DATE 07/23/18 | | |
| APPROVED: MP | REV DATE | SIZE C / QTY/MACHINE N/A / PART NUMBER FLEX WALKER 2019 | |
| DOC REV | | SCALE N/A | SHEET 4 OF 27 |

# BUILT IN PLC ANALOG

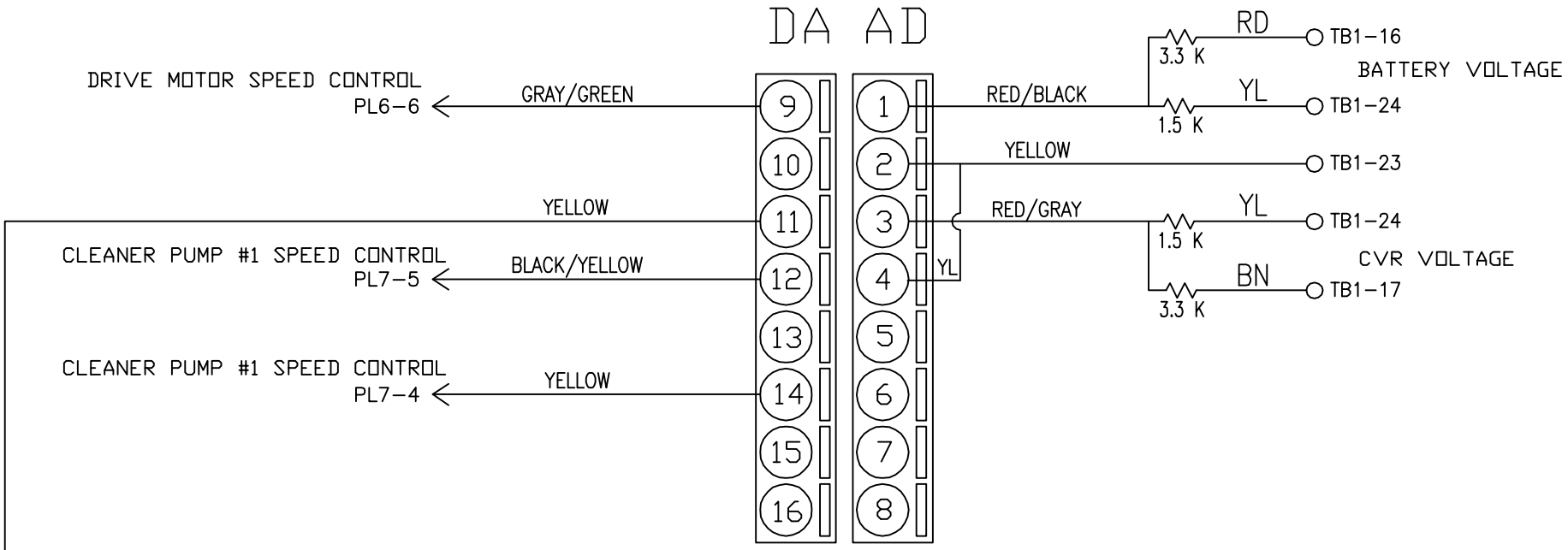


# AD021 ANALOG ADD ON UNIT

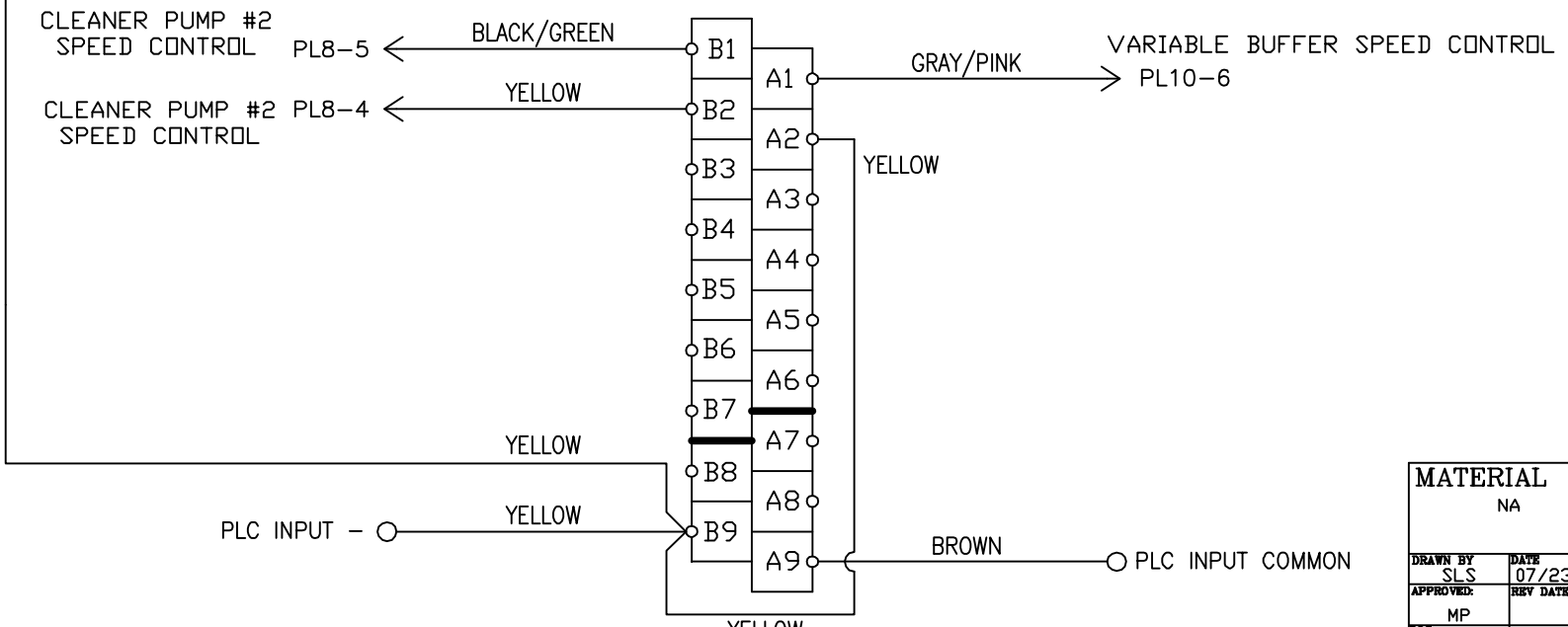


| | | | |
|---|---|---|---|
| MATERIAL: NA | KEGEL | | 1951 LONGLEAF BLVD. LAKE WALES, FL 33859 (863) 734-0200 |
| | DESCRIPTION: ANALOG WIRING SCHEMATIC | | |
| | DO NOT SCALE DRAWING | | |
| DRAWN BY: SLS | DATE: 07/23/18 | SIZE: C | QTY/MACHINE: | PART NUMBER: FLEX WALKER 2019 |
| APPROVED: MP | REV DATE: | SCALE: N/A | SHEET: 5 OF 27 |
| DOC REV: | | | |

# TB1
(MAIN)

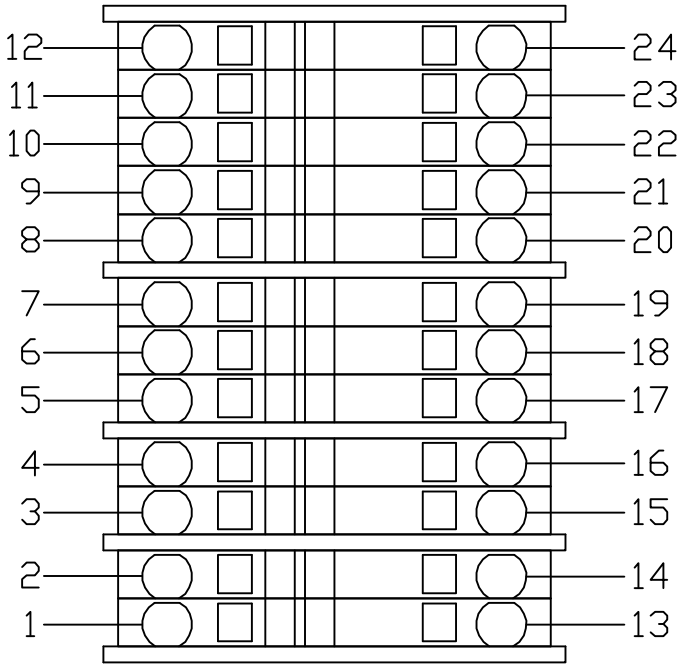


# TB2
(10-PIN SIDE)

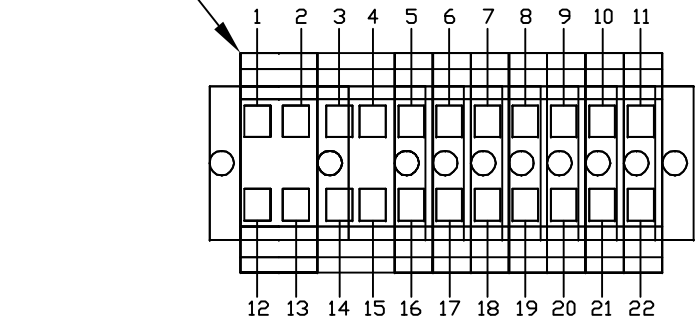


# TB3
(7-PIN SIDE)

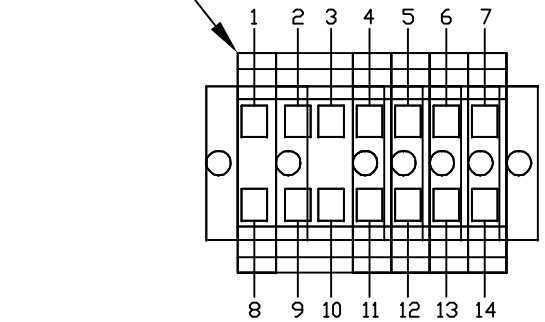


# TB4
(OIL PLATE)

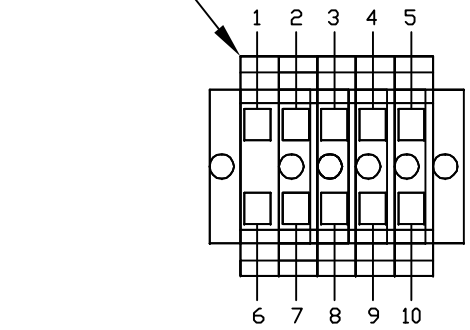


# TB5
(TOP PLC PLATE)

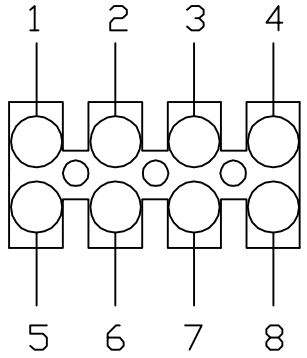


## LEGEND

TB1 - TERMINAL BLOCK 1 (MAIN)
TB2 - TERMINAL BLOCK 2 (10-PIN SIDE)
TB3 - TERMINAL BLOCK 3 (7-PIN SIDE)
TB4 - TERMINAL BLOCK 4 (OIL PLATE)
TB5 - TERMINAL BLOCK 5 (TOP PLC PLATE)

262

| | | | |
|---|---|---|---|
| MATERIAL: NA | | KEGEL | 1951 LONGLEAF BLVD. LAKE WALES, FL 33859 (863) 734-0200 |
| | | DESCRIPTION: TERMINAL BLOCK LAYOUT | |
| DRAWN BY: SLS | DATE: 07/23/18 | DO NOT SCALE DRAWING | |
| APPROVED: MP | REV DATE: | SIZE: C / QTY/MACHINE: / PART NUMBER: FLEX WALKER 2019 | |
| DOC REV: | | SCALE: N/A | SHEET: 6 OF 27 |

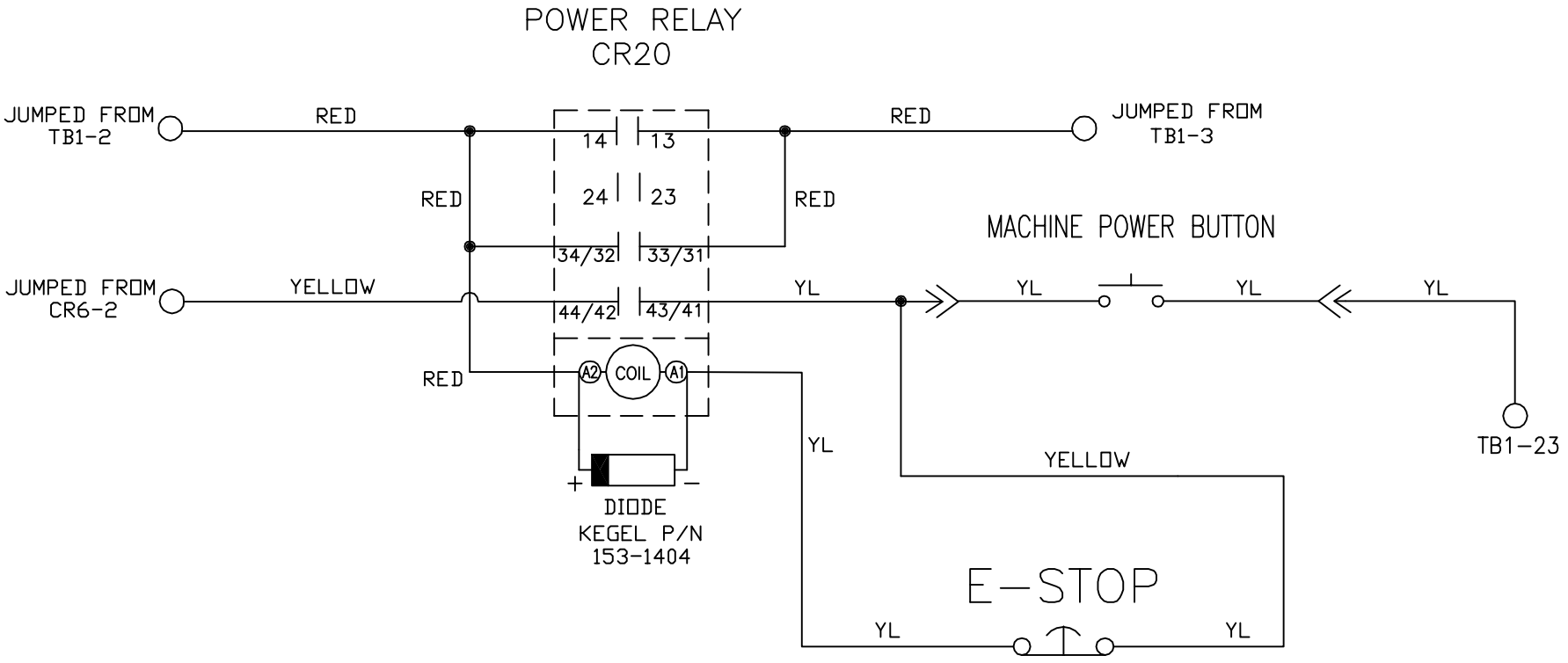


| | | | |
|---|---|---|---|
| MATERIAL: N/A | | THE KEGEL CO. 1951 LONGLEAF BLVD. LAKE WALES, FL 33859 (863) 734-0200 | |
| | | DESCRIPTION: POWER RELAY WIRING | |
| | | DO NOT SCALE DRAWING | |
| DRAWN BY: SLS | DATE: 07/23/18 | SIZE: A | QTY/MACHINE: N/A |
| APPROVED: MP | REV DATE: | PART NUMBER: FLEX WALKER 2019 | |
| DOC REV: | | SCALE: N/A | SHEET: 7 OF 27 |

# VOLTAGE REGULATOR

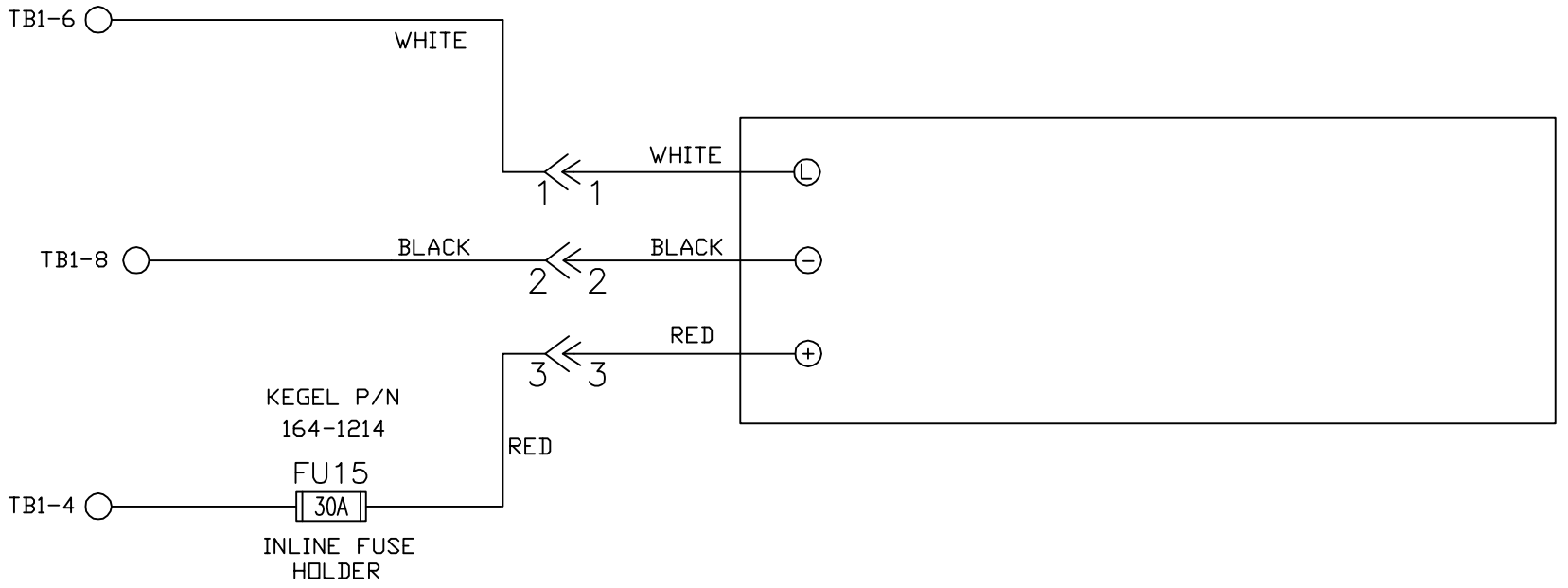


| | | | |
|---|---|---|---|
| MATERIAL: N/A | | THE KEGEL CO. 1951 LONGLEAF BLVD. LAKE WALES, FL 33859 (863) 734-0200 | |
| | | DESCRIPTION: VOLTAGE REGULATOR WIRING | |
| | | DO NOT SCALE DRAWING | |
| DRAWN BY: SLS | DATE: 07/23/18 | SIZE: A | QTY/MACHINE: N/A |
| APPROVED: MP | REV DATE: | PART NUMBER: FLEX WALKER 2019 | |
| DOC REV: | | SCALE: N/A | SHEET: 8 OF 27 |

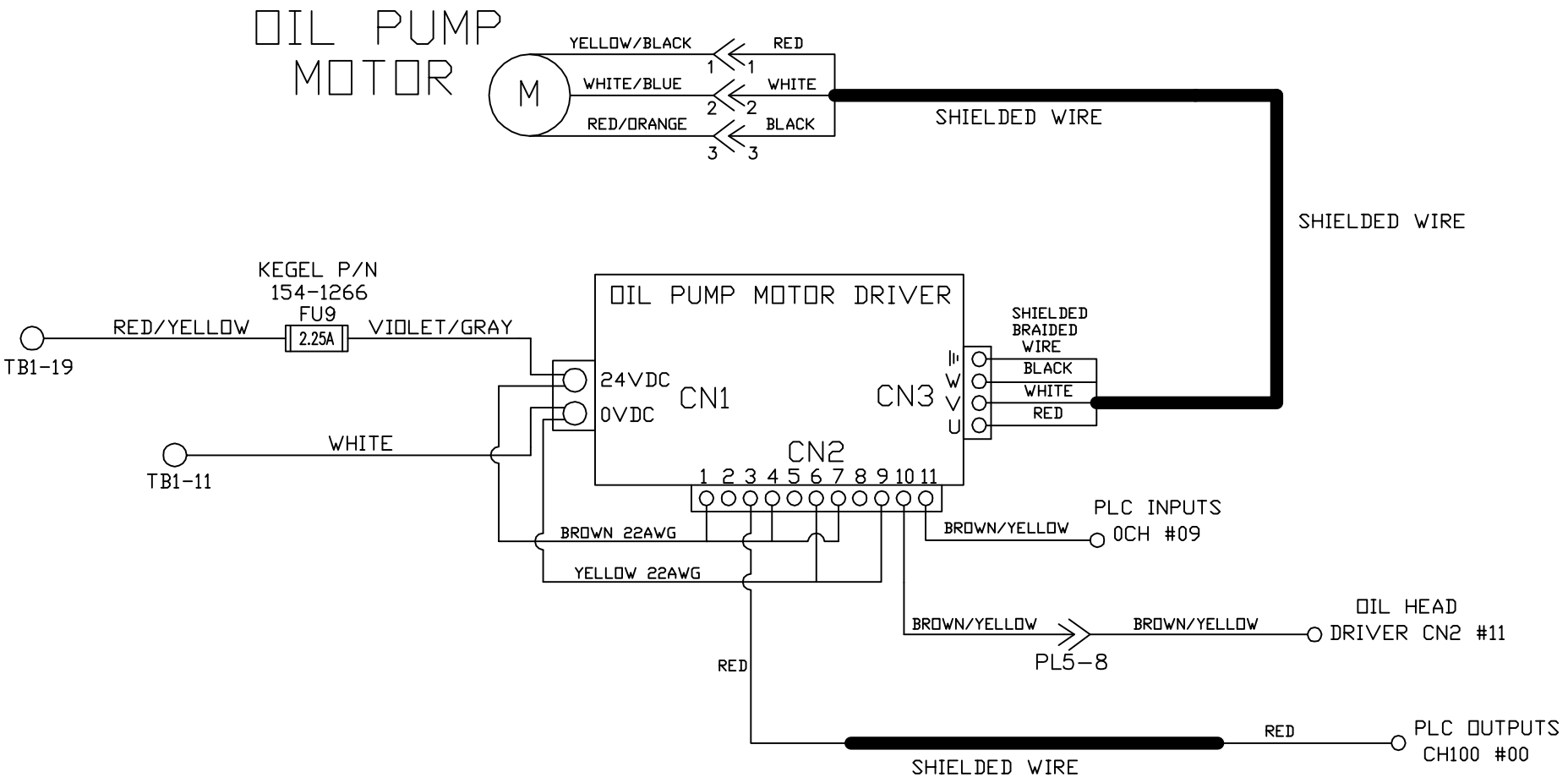


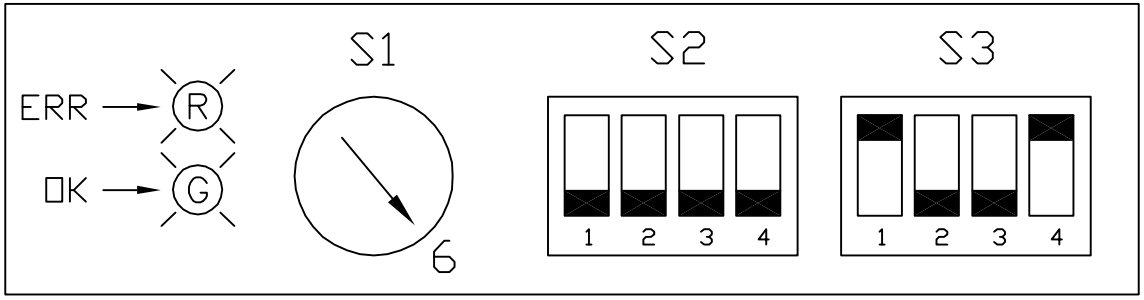


| | | | |
|---|---|---|---|
| MATERIAL N/A | | THE KEGEL CO. 1951 LONGLEAF BLVD. LAKE WALES, FL 33859 (863) 734-0200 | |
| | | DESCRIPTION OIL PUMP DRIVER & MOTOR WIRING | |
| | | DO NOT SCALE DRAWING | |
| DRAWN BY SLS | DATE 07/23/18 | SIZE A | QTY/MACHINE N/A | PART NUMBER FLEX WALKER 2019 |
| APPROVED: MP | REV DATE | | | |
| DOC REV | | SCALE N/A | SHEET 9 OF 27 | |

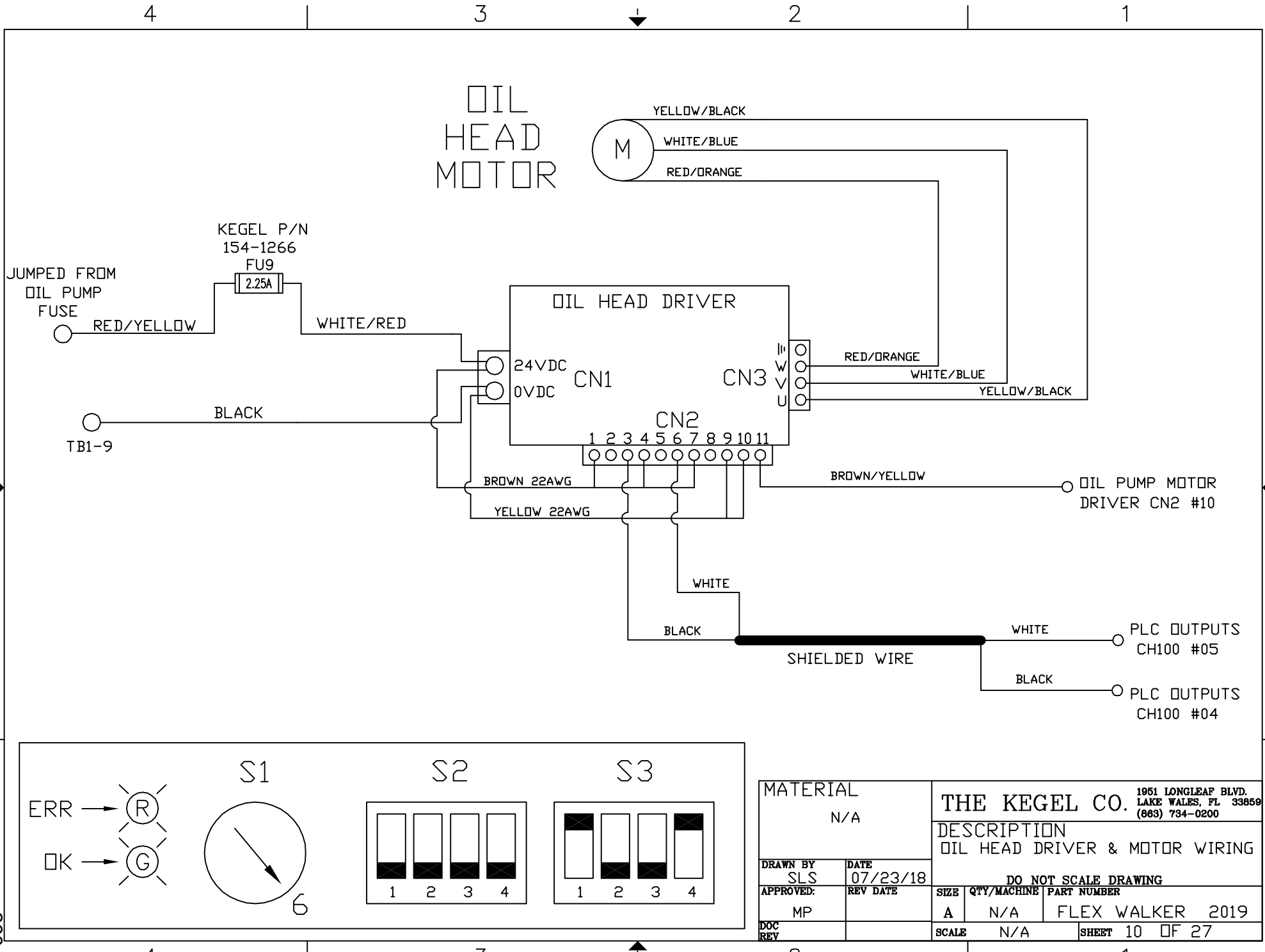


| | | | |
|---|---|---|---|
| MATERIAL N/A | | THE KEGEL CO. 1951 LONGLEAF BLVD. LAKE WALES, FL 33859 (863) 734-0200 | |
| | | DESCRIPTION OIL HEAD DRIVER & MOTOR WIRING | |
| DRAWN BY SLS | DATE 07/23/18 | DO NOT SCALE DRAWING | |
| APPROVED: MP | REV DATE | SIZE A / QTY/MACHINE N/A / PART NUMBER FLEX WALKER 2019 | |
| DOC REV | | SCALE N/A | SHEET 10 OF 27 |

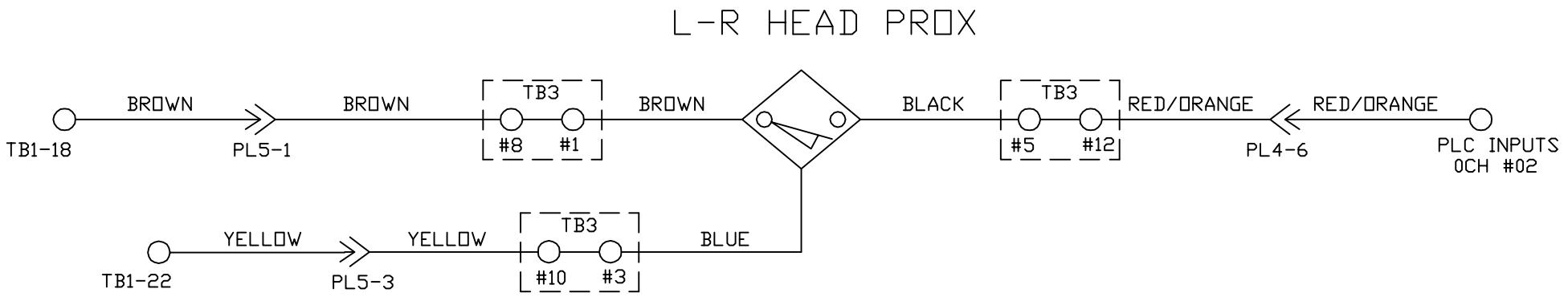


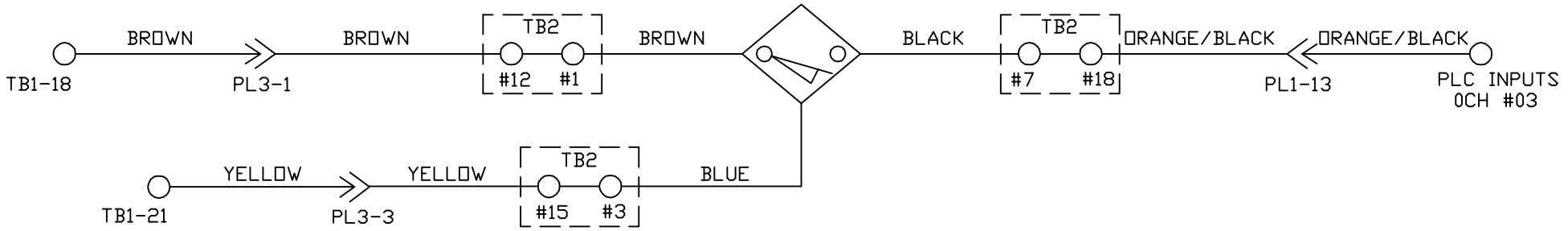


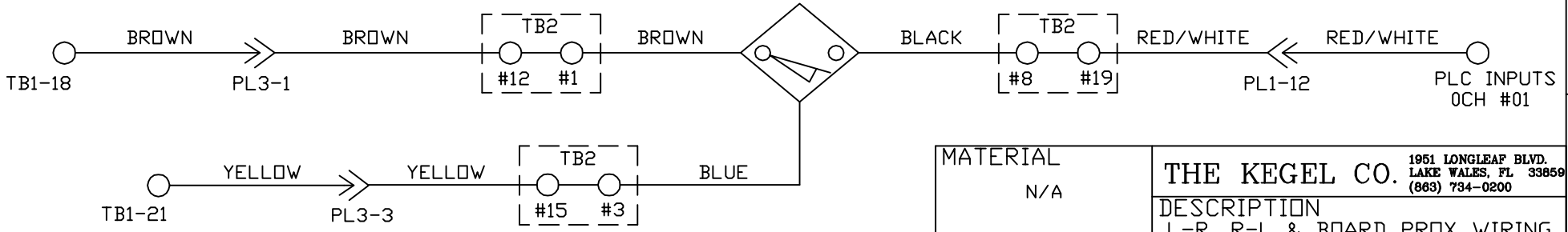


| | | | |
|---|---|---|---|
| MATERIAL: N/A | THE KEGEL CO. 1951 LONGLEAF BLVD. LAKE WALES, FL 33859 (863) 734-0200 | | |
| | DESCRIPTION: L-R, R-L & BOARD PROX WIRING | | |
| | DO NOT SCALE DRAWING | | |
| DRAWN BY: SLS / DATE: 07/23/18 | SIZE: A | QTY/MACHINE: N/A | PART NUMBER: FLEX WALKER 2019 |
| APPROVED: MP / REV DATE: | SCALE: N/A | SHEET: 11 OF 27 | |
| DOC REV: | | | |

267

# OIL VALVE #1 — TANK A

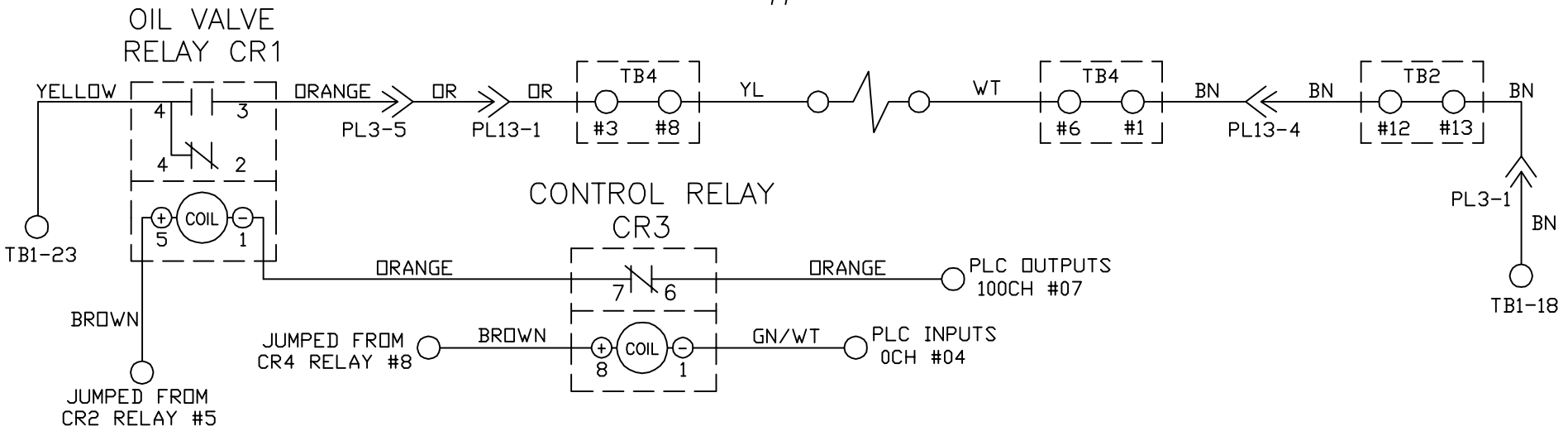


# OIL VALVE #2 — TANK B

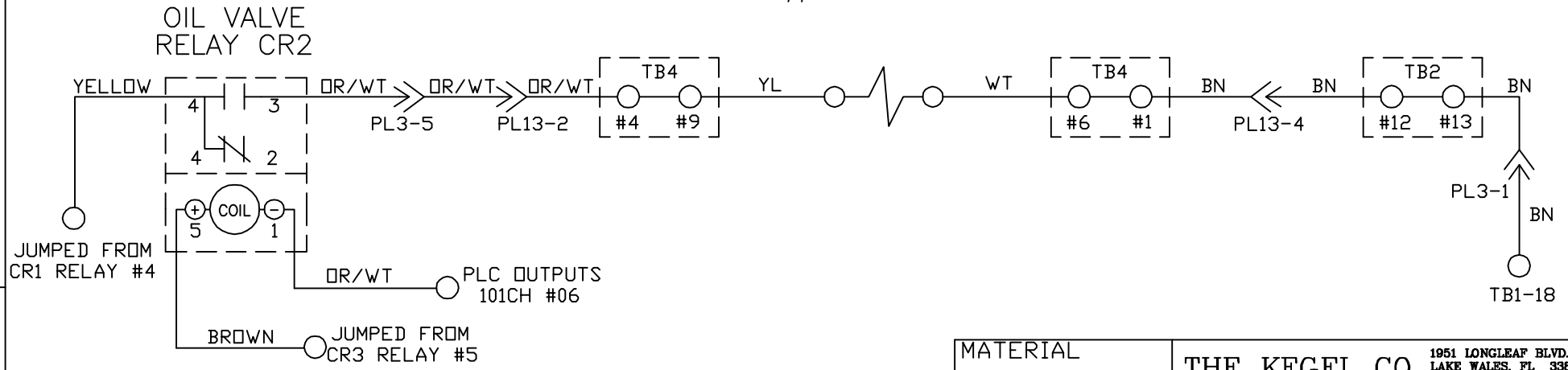


| | | | |
|---|---|---|---|
| MATERIAL | | THE KEGEL CO. 1951 LONGLEAF BLVD. LAKE WALES, FL 33859 (863) 734-0200 | |
| | | DESCRIPTION: OIL VALVES RELAY WIRING | |
| DRAWN BY: SLS | DATE: 07/23/18 | DO NOT SCALE DRAWING | |
| APPROVED: MP | REV DATE: | SIZE: A | QTY/MACHINE: N/A |
| DOC REV: | | PART NUMBER: FLEX WALKER 2019 | |
| | | SCALE: N/A | SHEET: 12 OF 27 |

268

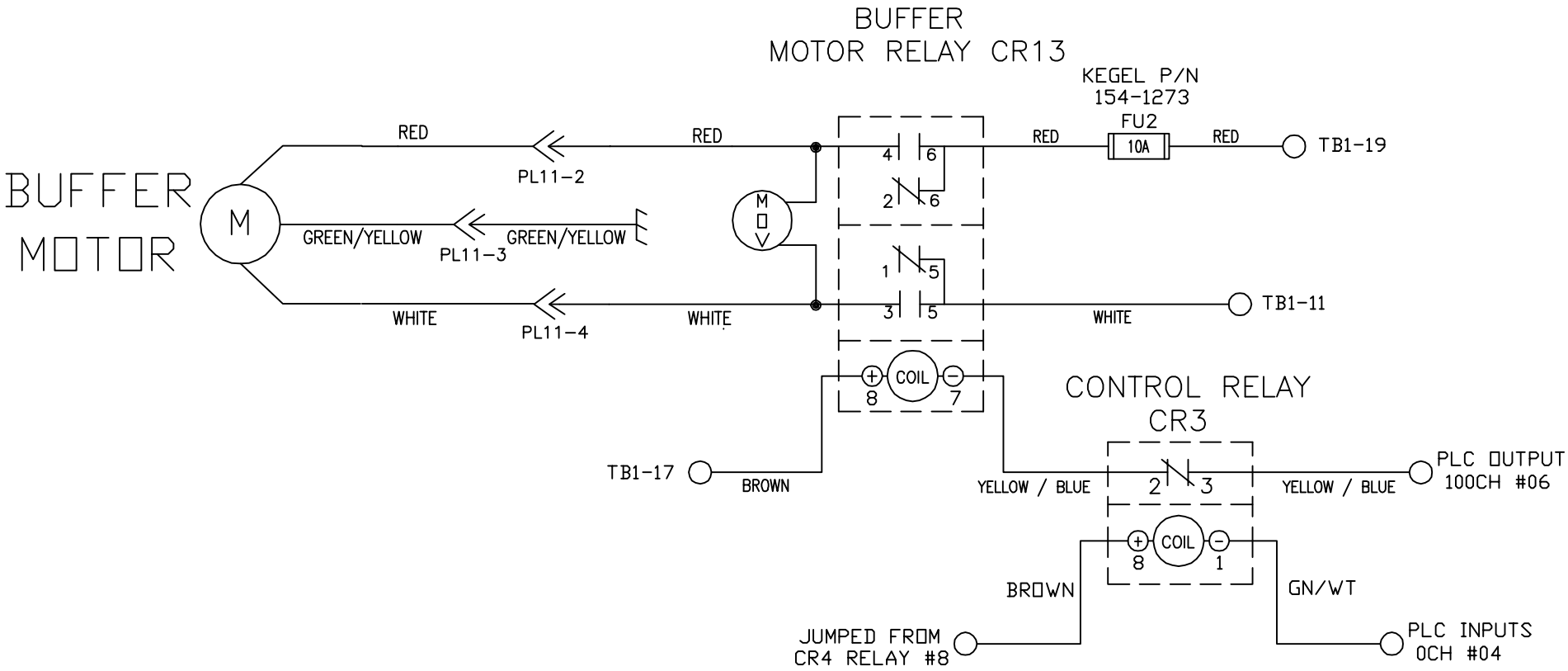


| | | | |
|---|---|---|---|
| MATERIAL: N/A | | THE KEGEL CO. 1951 LONGLEAF BLVD. LAKE WALES, FL 33859 (863) 734-0200 | |
| DRAWN BY: SLS | DATE: 07/23/18 | DESCRIPTION: BUFFER MOTOR WIRING | |
| APPROVED: MP | REV DATE: | DO NOT SCALE DRAWING | |
| DOC REV: | | SIZE: A | QTY/MACHINE: N/A |
| | | SCALE: N/A | SHEET: 13 OF 27 |

PART NUMBER: FLEX WALKER 2019

269

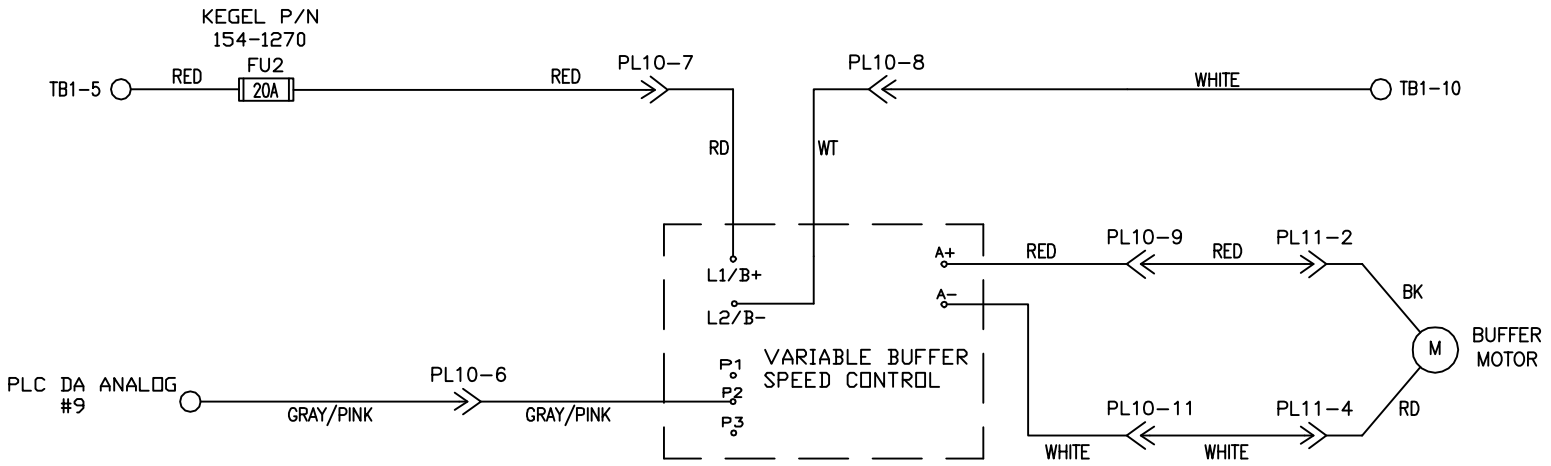


# VARIABLE BUFFER PROX

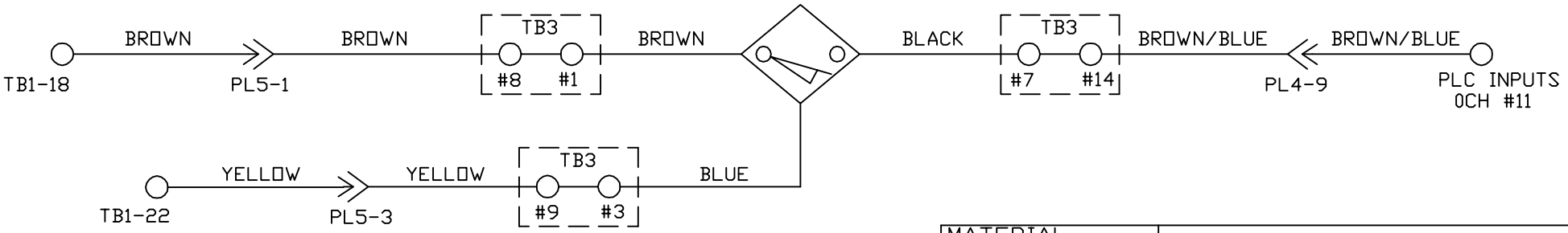


| | | | |
|---|---|---|---|
| MATERIAL: N/A | | THE KEGEL CO. 1951 LONGLEAF BLVD. LAKE WALES, FL 33859 (863) 734-0200 | |
| DRAWN BY: SLS | DATE: 07/23/18 | DESCRIPTION: VARIABLE BUFFER MOTOR & TACH WIRING<br>DO NOT SCALE DRAWING | |
| APPROVED: MP | REV DATE: | SIZE: A | QTY/MACHINE: N/A |
| DOC REV: | | PART NUMBER: FLEX WALKER 2019 | |
| | | SCALE: N/A | SHEET: 14 OF 27 |

270

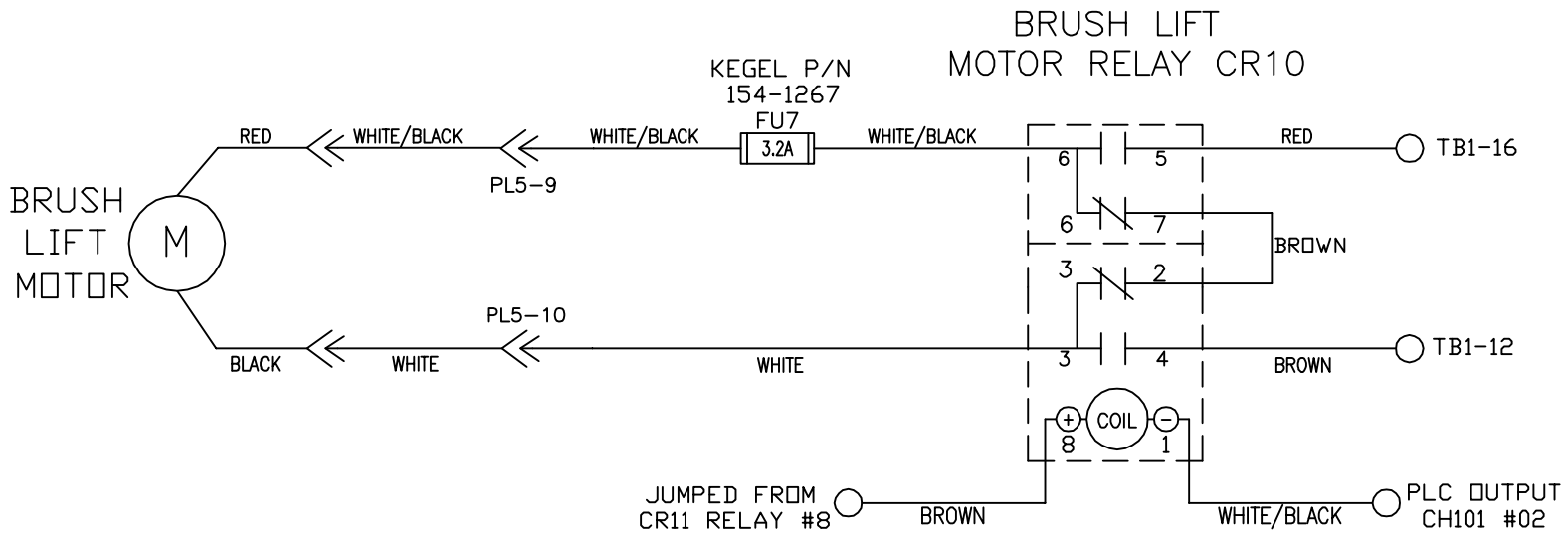


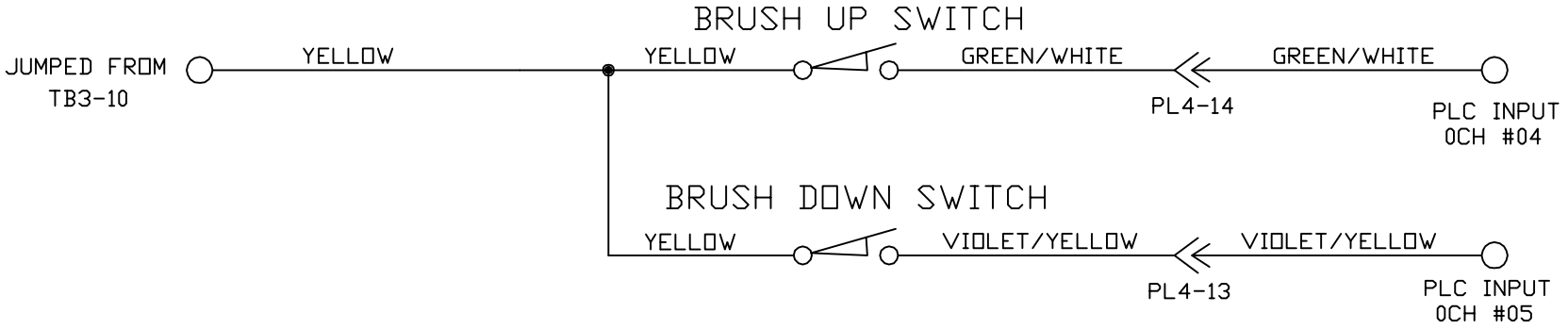


| | | | |
|---|---|---|---|
| MATERIAL N/A | | THE KEGEL CO. 1951 LONGLEAF BLVD. LAKE WALES, FL 33859 (863) 734-0200 | |
| DRAWN BY SLS | DATE 07/23/18 | DESCRIPTION BRUSH LIFT MOTOR & SWITCH WIRING DO NOT SCALE DRAWING | |
| APPROVED: MP | REV DATE | SIZE A | QTY/MACHINE N/A |
| DOC REV | | SCALE N/A | PART NUMBER FLEX WALKER 2019 |
| | | | SHEET 15 OF 27 |

271

# VACUUM MOTOR
# RELAY CR19

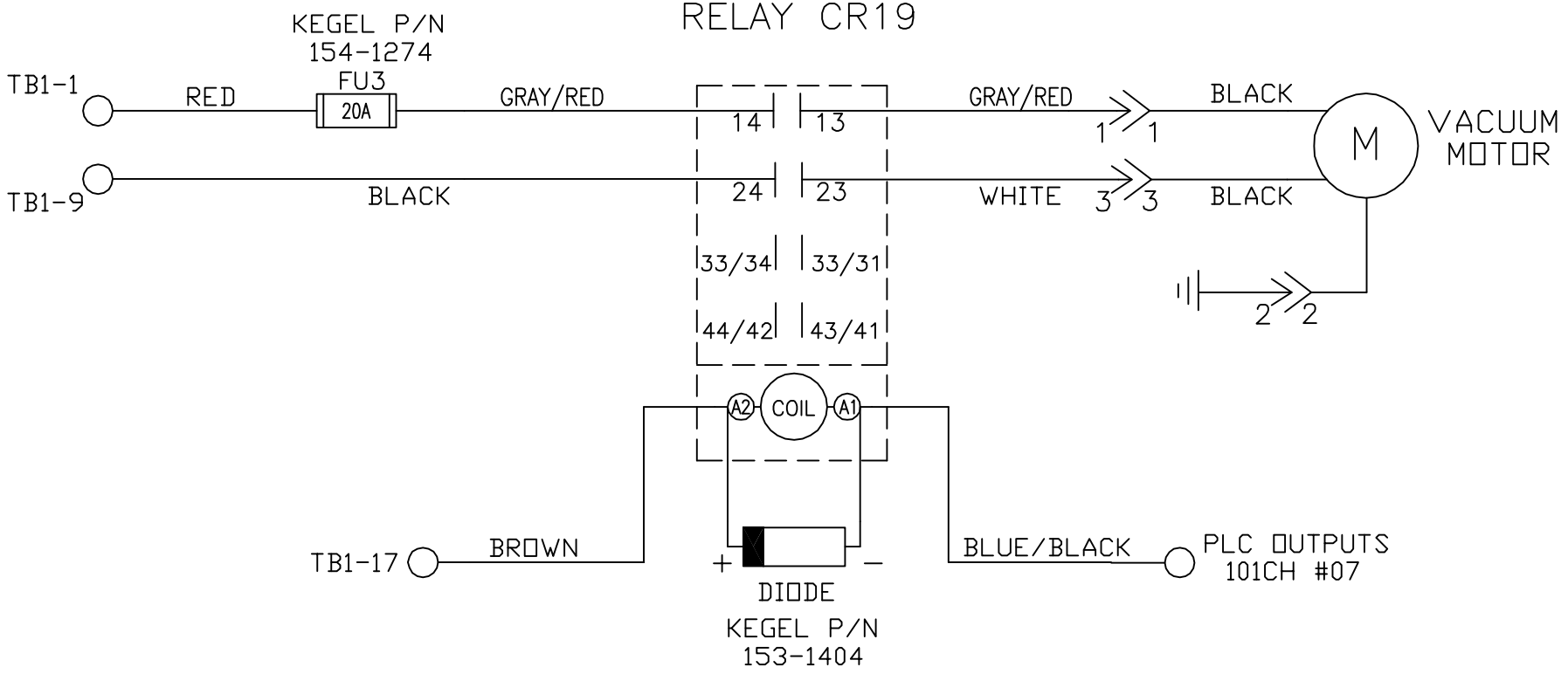


| | | | |
|---|---|---|---|
| MATERIAL: N/A | | THE KEGEL CO. 1951 LONGLEAF BLVD. LAKE WALES, FL 33859 (863) 734-0200 | |
| | | DESCRIPTION: VACUUM MOTOR WIRING | |
| DRAWN BY: SLS | DATE: 07/23/18 | DO NOT SCALE DRAWING | |
| APPROVED: MP | REV DATE: | SIZE: A | QTY/MACHINE: N/A |
| DOC REV: | | PART NUMBER: FLEX WALKER 2019 | |
| | | SCALE: N/A | SHEET: 16 OF 27 |

272

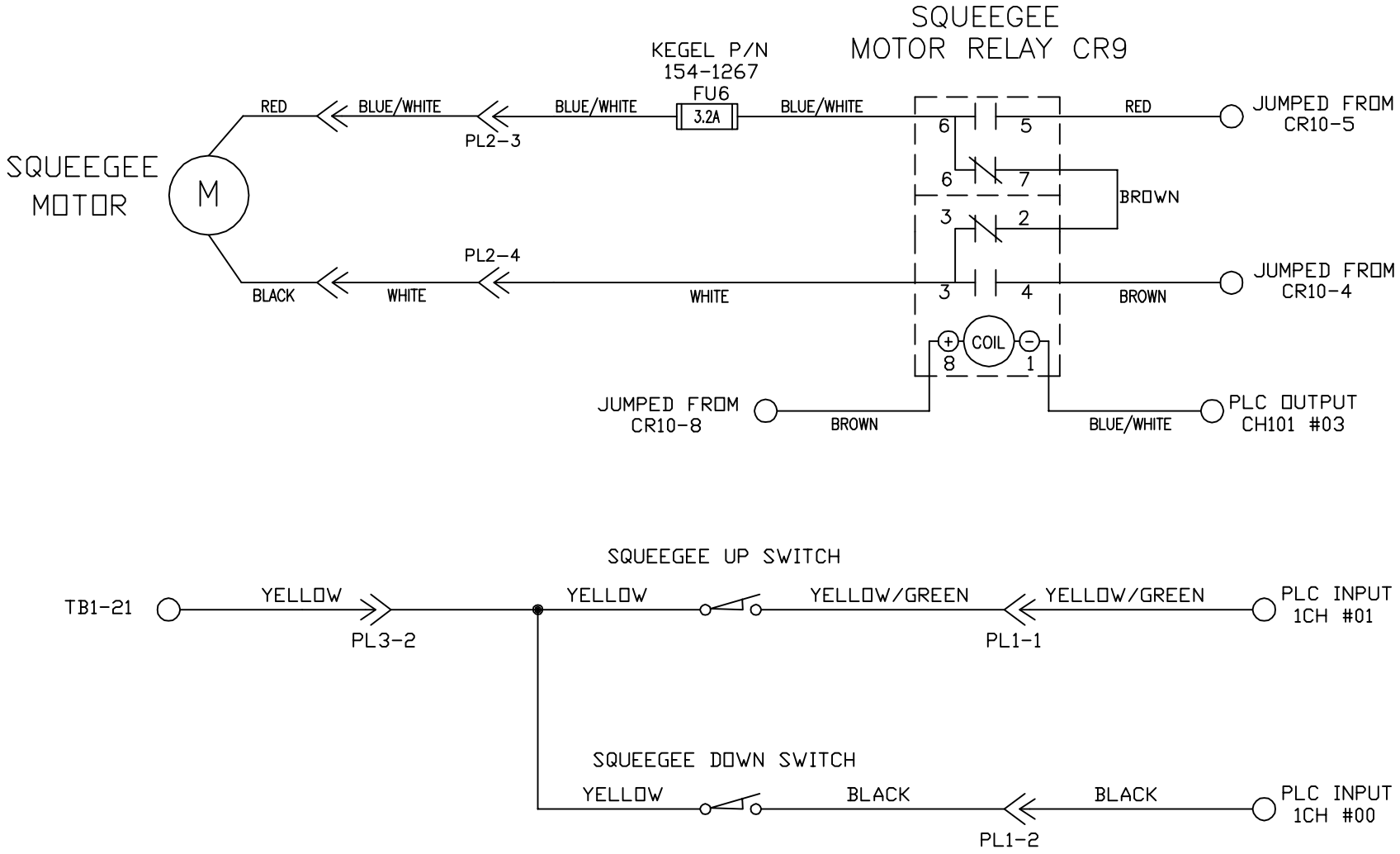


| | | | |
|---|---|---|---|
| MATERIAL: N/A | | THE KEGEL CO. 1951 LONGLEAF BLVD. LAKE WALES, FL 33859 (863) 734-0200 | |
| DRAWN BY: SLS | DATE: 07/23/18 | DESCRIPTION: SQUEEGEE MOTOR & SWITCH WIRING DO NOT SCALE DRAWING | |
| APPROVED: MP | REV DATE: | SIZE: A | QTY/MACHINE: N/A |
| DOC REV: | | SCALE: N/A | PART NUMBER: FLEX WALKER 2019 |
| | | | SHEET: 17 OF 27 |

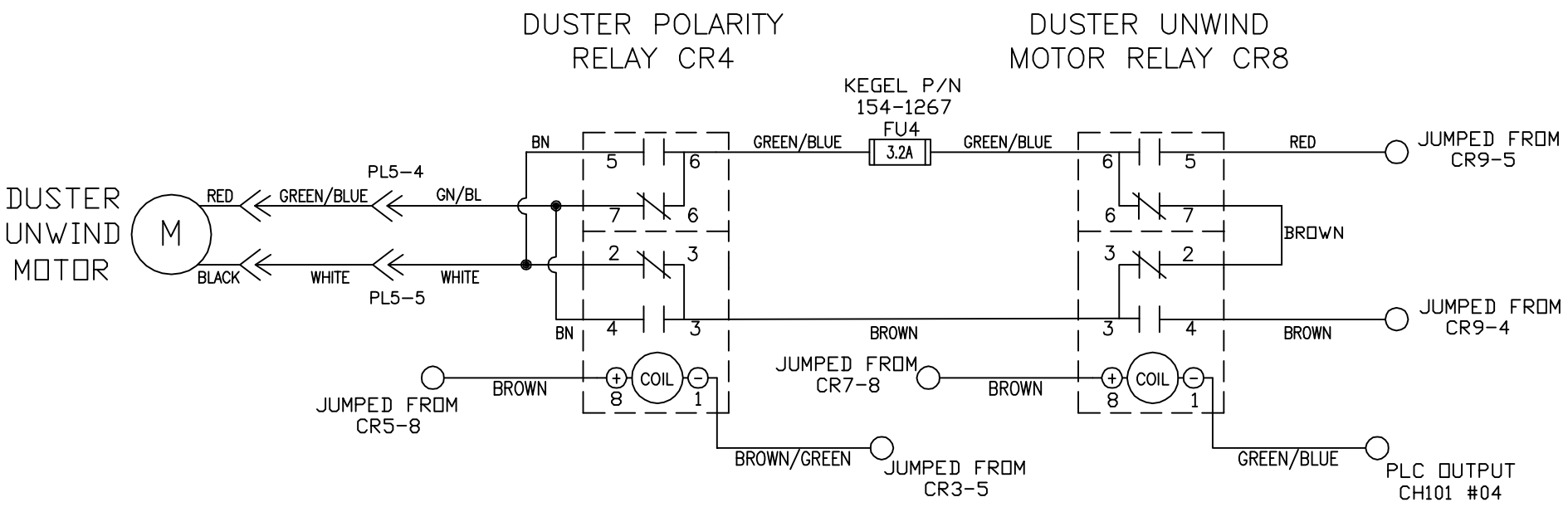


## STOP BY SENSOR

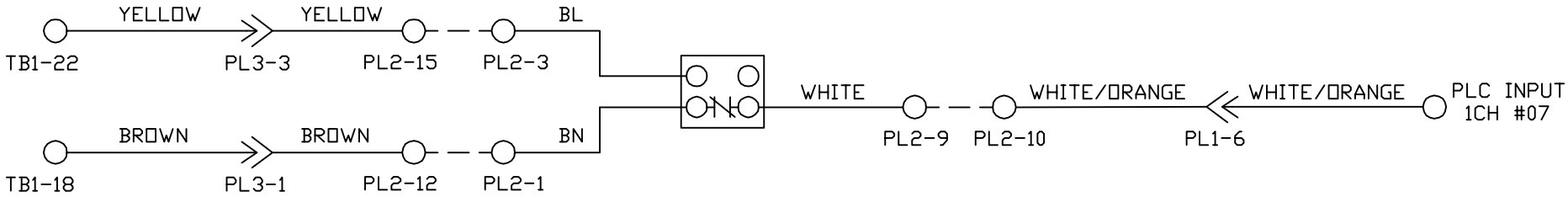


| | | | |
|---|---|---|---|
| MATERIAL: N/A | | THE KEGEL CO. 1951 LONGLEAF BLVD. LAKE WALES, FL 33859 (863) 734-0200 | |
| DRAWN BY: SLS | DATE: 07/23/18 | DESCRIPTION: DUSTER UNWIND & STOP BY SENSOR WIRING DO NOT SCALE DRAWING | |
| APPROVED: MP | REV DATE: | SIZE: A | QTY/MACHINE: N/A |
| DOC REV: | | SCALE: N/A | PART NUMBER: FLEX WALKER 2019 |
| | | | SHEET: 18 OF 27 |

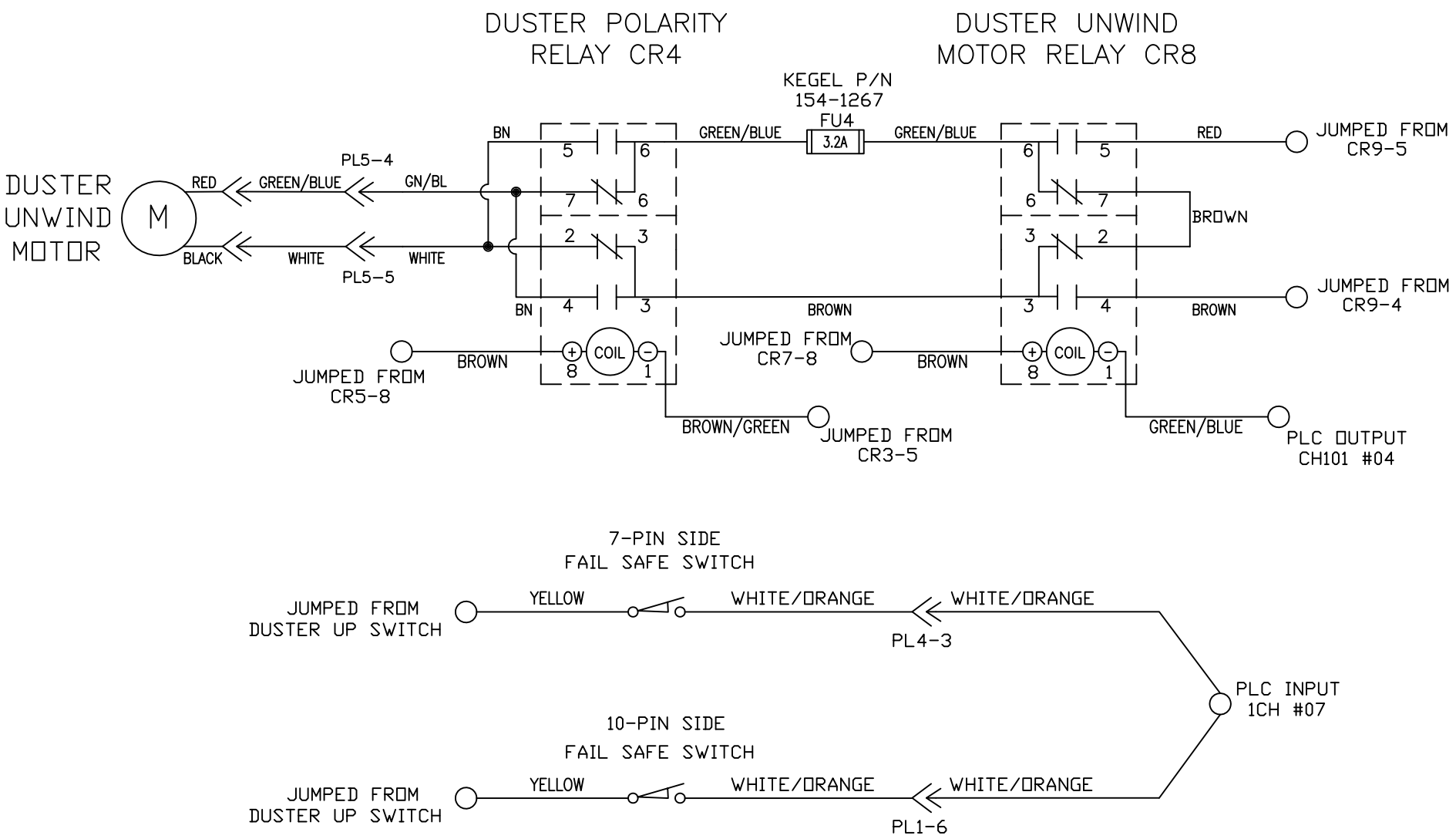


| | | | |
|---|---|---|---|
| MATERIAL: N/A | | THE KEGEL CO. 1951 LONGLEAF BLVD. LAKE WALES, FL 33859 (863) 734-0200 | |
| DRAWN BY: SLS | DATE: 07/21/15 | DESCRIPTION: DUSTER UNWIND & SWITCH WIRING DO NOT SCALE DRAWING | |
| APPROVED: MP | REV DATE: | SIZE: A | QTY/MACHINE: N/A |
| DOC REV: | | SCALE: N/A | PART NUMBER: FLEX WALKER 2016 |
| | | | SHEET: 18 OF 27 |

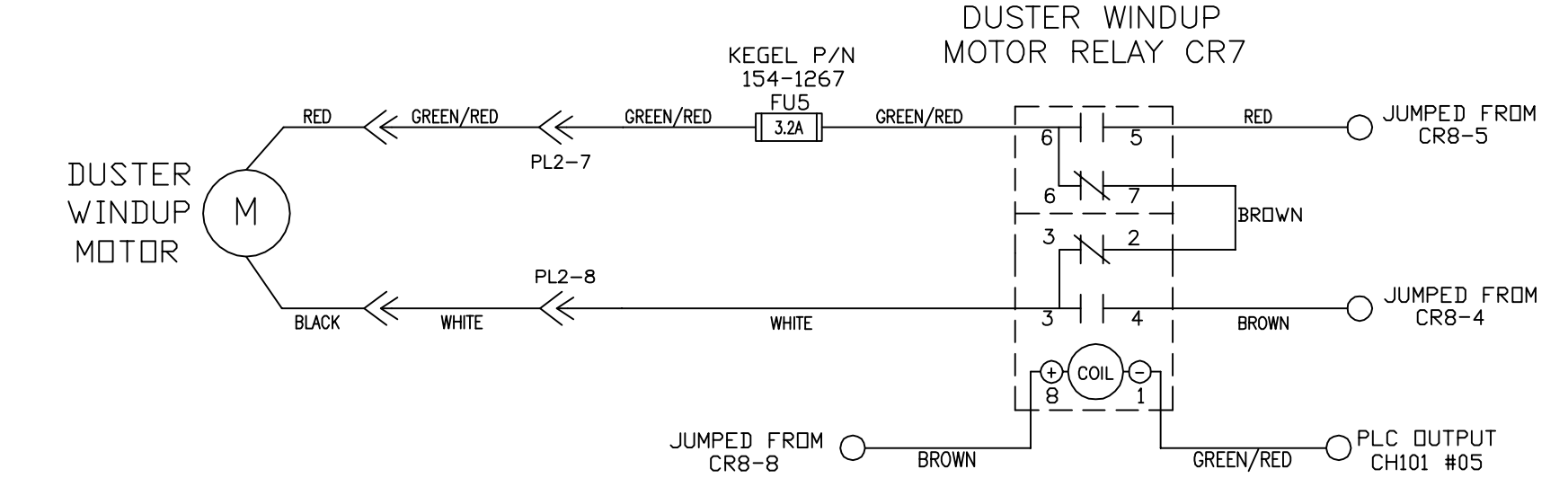


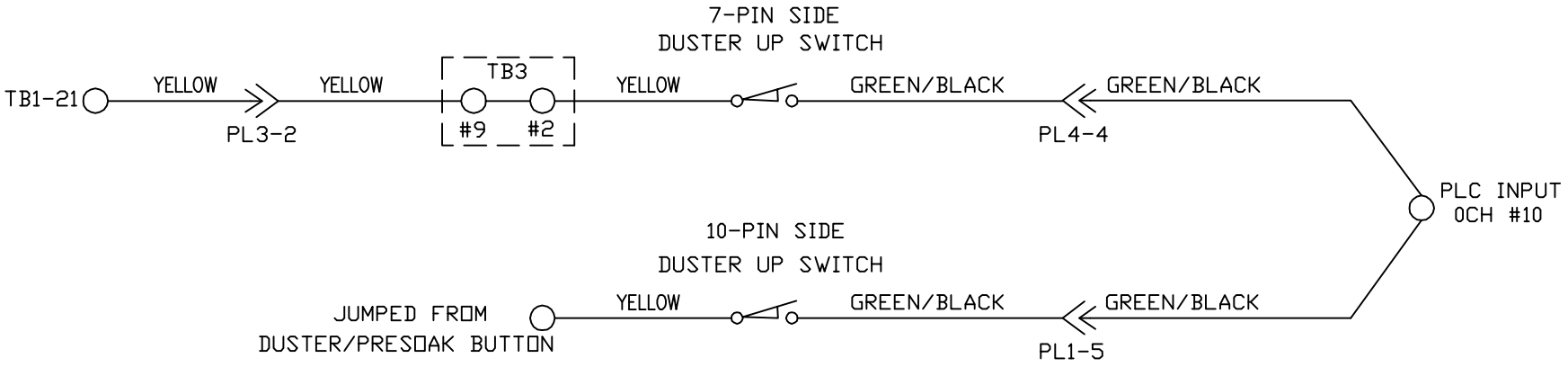


| | | | |
|---|---|---|---|
| MATERIAL: N/A | | THE KEGEL CO. 1951 LONGLEAF BLVD. LAKE WALES, FL 33859 (863) 734-0200 | |
| DRAWN BY: SLS | DATE: 07/23/18 | DESCRIPTION: DUSTER WINDUP & SWITCH WIRING<br>DO NOT SCALE DRAWING | |
| APPROVED: MP | REV DATE: | SIZE: A | QTY/MACHINE: N/A |
| DOC REV: | | SCALE: N/A | PART NUMBER: FLEX WALKER 2019<br>SHEET: 19 OF 27 |

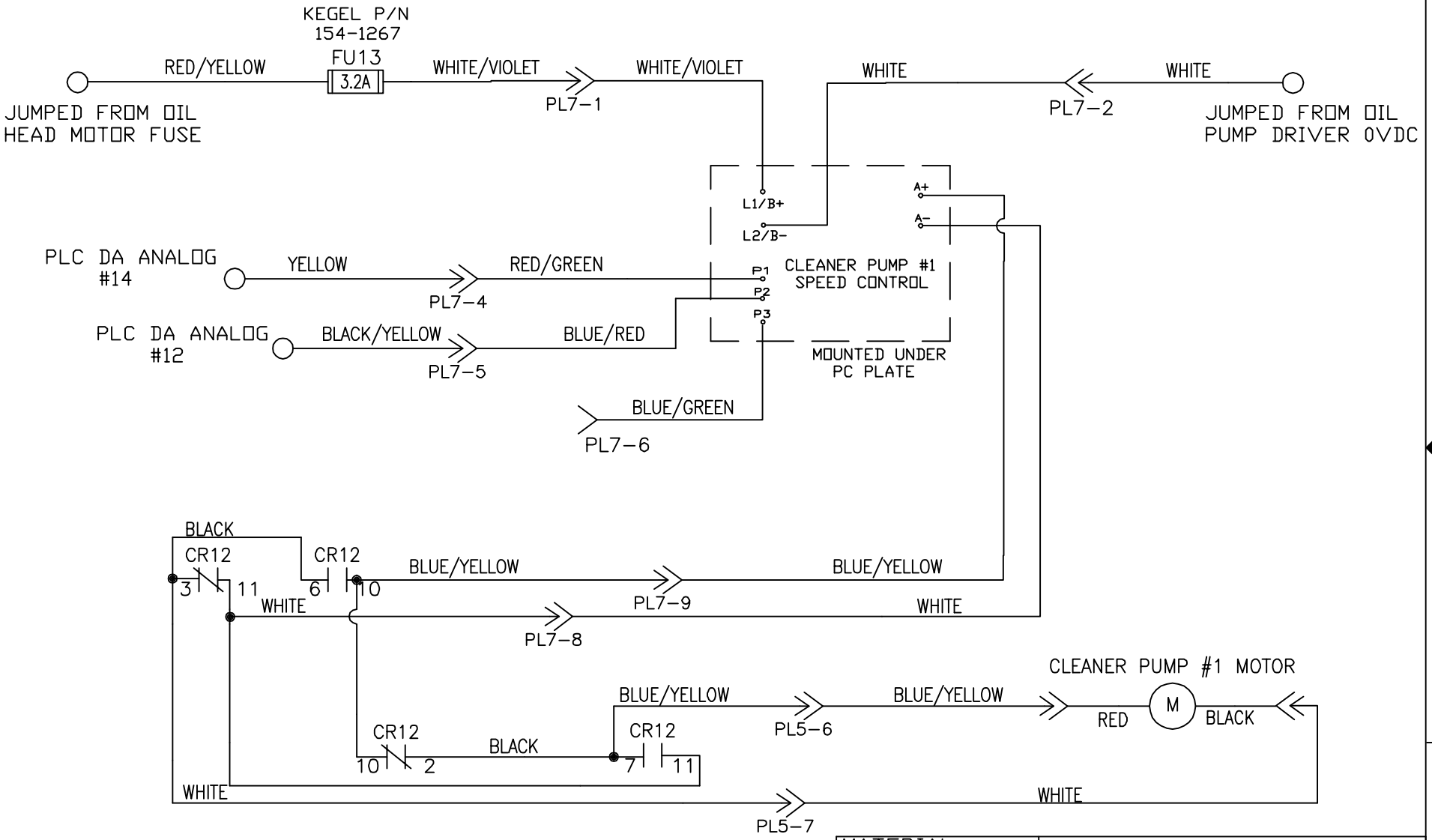


| | | | |
|---|---|---|---|
| MATERIAL: N/A | THE KEGEL CO. 1951 LONGLEAF BLVD. LAKE WALES, FL 33859 (863) 734-0200 | | |
| | DESCRIPTION: CLEANER PUMP # 1 SPEED CONTROL WIRING<br>DO NOT SCALE DRAWING | | |
| DRAWN BY: SLS | DATE: 07/23/18 | SIZE: A | QTY/MACHINE: N/A |
| APPROVED: MP | REV DATE: | PART NUMBER: FLEX WALKER 2019 | |
| DOC REV: | | SCALE: N/A | SHEET: 20 OF 27 |

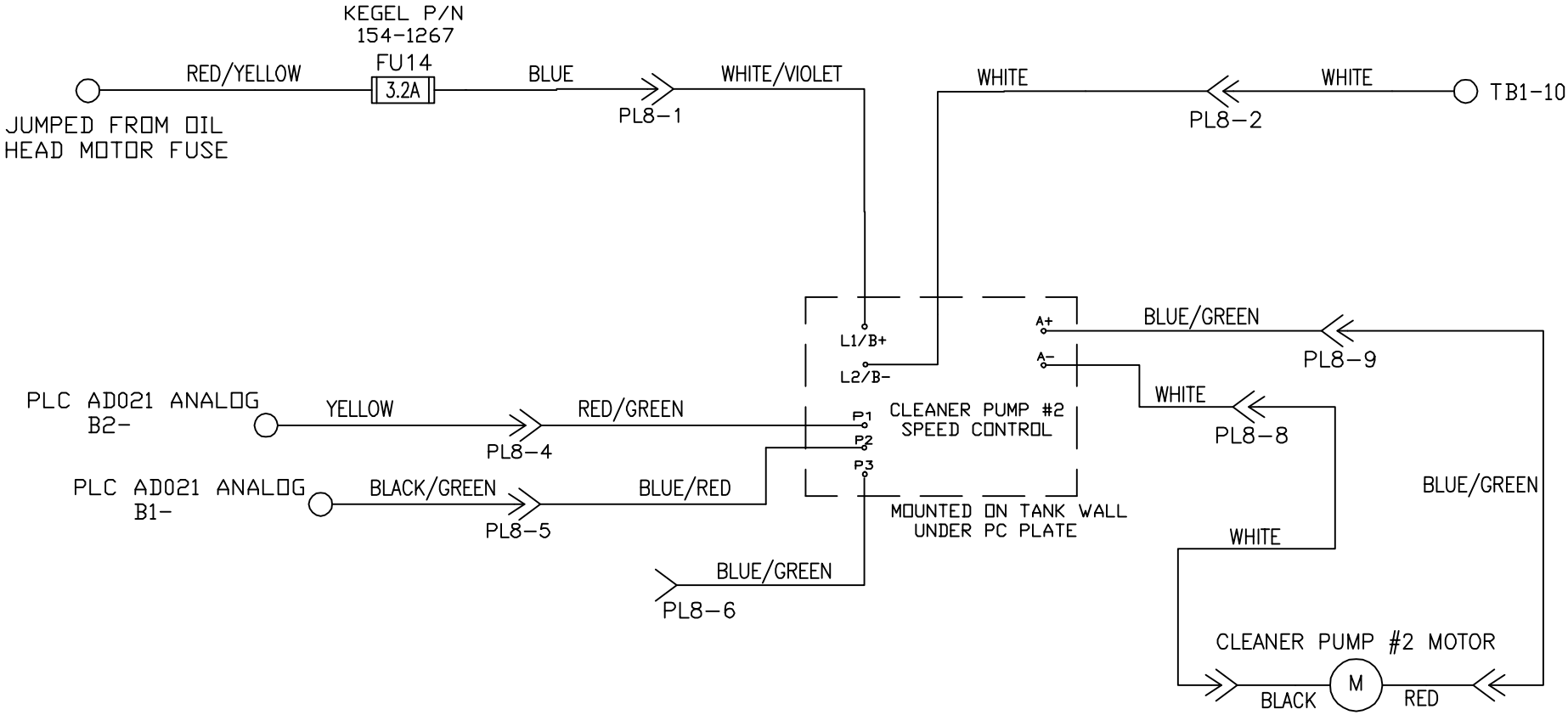


| | | | |
|---|---|---|---|
| MATERIAL: N/A | | THE KEGEL CO. 1951 LONGLEAF BLVD. LAKE WALES, FL 33859 (863) 734-0200 | |
| DRAWN BY: SLS | DATE: 07/23/18 | DESCRIPTION: CLEANER PUMP # 2 SPEED CONTROL WIRING | |
| APPROVED: MP | REV DATE: | DO NOT SCALE DRAWING | |
| DOC REV: | | SIZE: A / QTY/MACHINE: N/A / PART NUMBER: FLEX WALKER 2019 | |
| | | SCALE: N/A | SHEET: 21 OF 27 |

# DUSTER/PRESOAK BUTTON

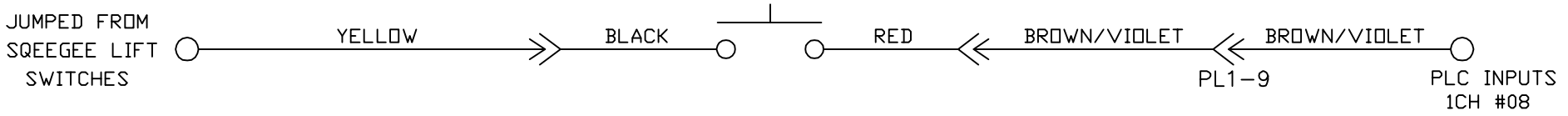


## PIN DECK TREATMENT RELAY CR5

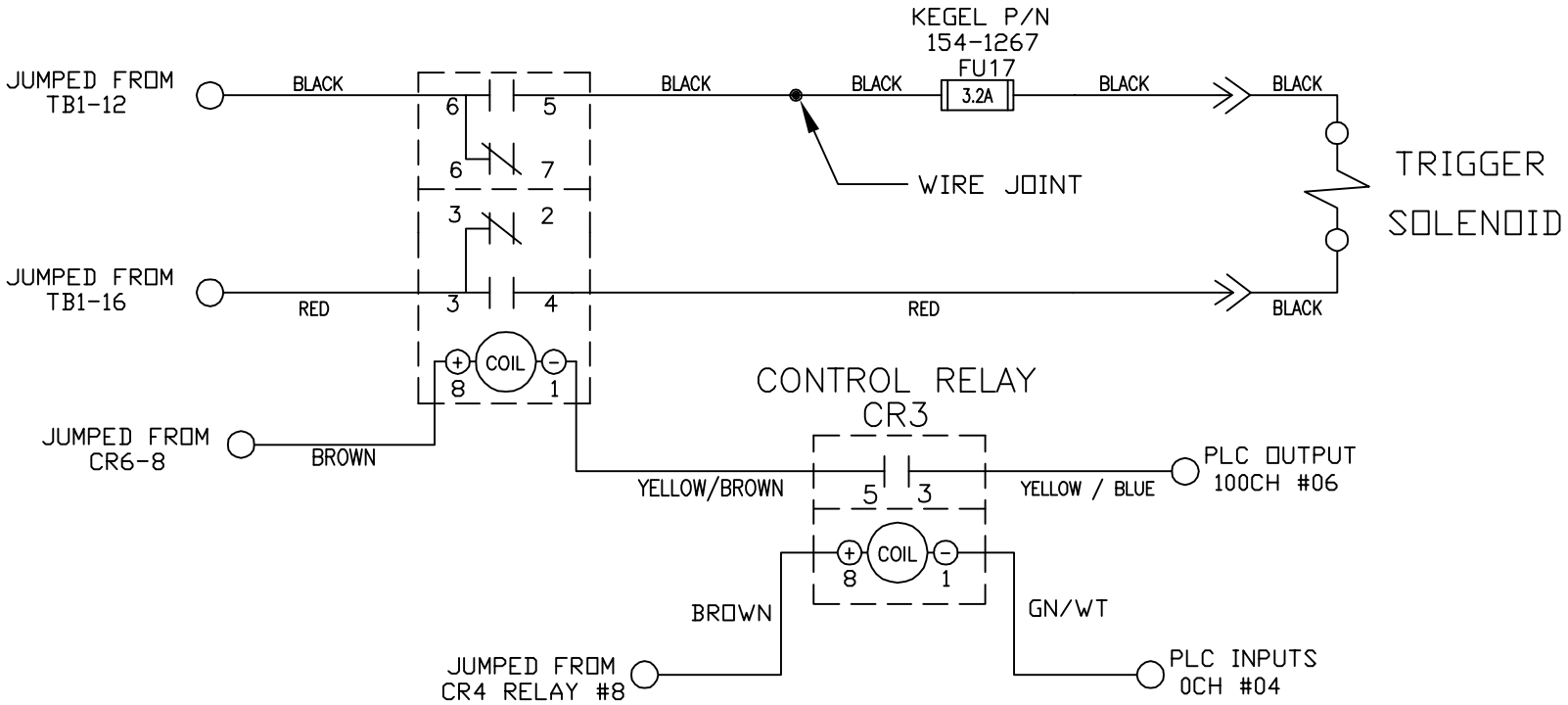


| | | | |
|---|---|---|---|
| MATERIAL: N/A | | THE KEGEL CO. 1951 LONGLEAF BLVD. LAKE WALES, FL 33859 (863) 734-0200 | |
| DRAWN BY: SLS | DATE: 07/23/18 | DESCRIPTION: DUSTER/PRESOAK BUTTON & TRIGGER SOLENOID<br>DO NOT SCALE DRAWING | |
| APPROVED: MP | REV DATE: | SIZE: A | QTY/MACHINE: N/A |
| DOC REV: | | SCALE: N/A | PART NUMBER: FLEX WALKER 2019<br>SHEET: 22 OF 27 |

# DUSTER/PRESOAK BUTTON

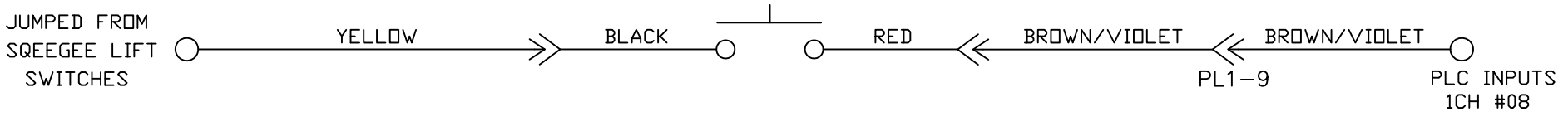


## PIN DECK TREATMENT RELAY CR5

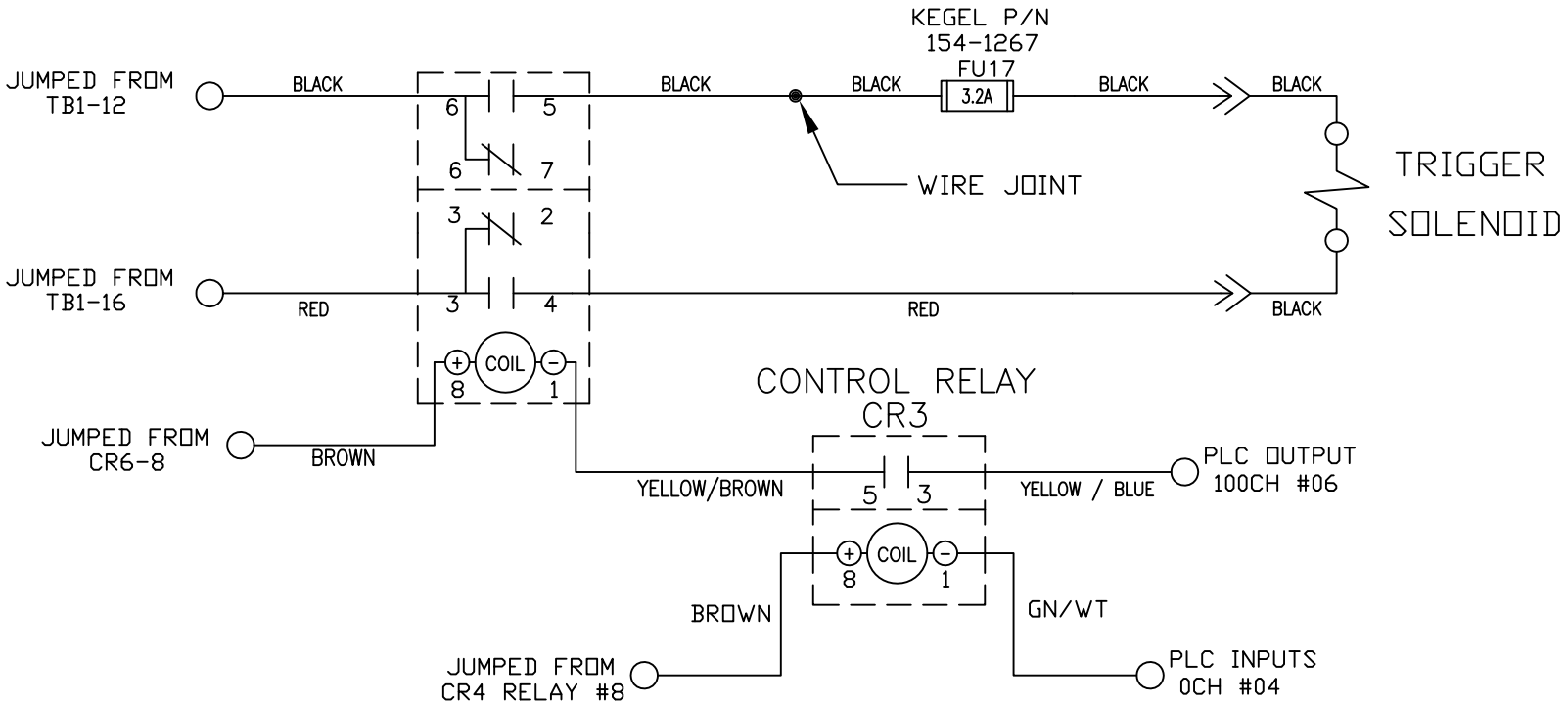


| | | | |
|---|---|---|---|
| MATERIAL: N/A | | THE KEGEL CO. 1951 LONGLEAF BLVD. LAKE WALES, FL 33859 (863) 734-0200 | |
| DRAWN BY: SLS | DATE: 07/21/15 | DESCRIPTION: DUSTER/PRESOAK BUTTON & TRIGGER SOLENOID<br>DO NOT SCALE DRAWING | |
| APPROVED: MP | REV DATE: | SIZE: A | QTY/MACHINE: N/A |
| DOC REV: | | SCALE: N/A | PART NUMBER: FLEX WALKER 2016<br>SHEET: 22 OF 27 |

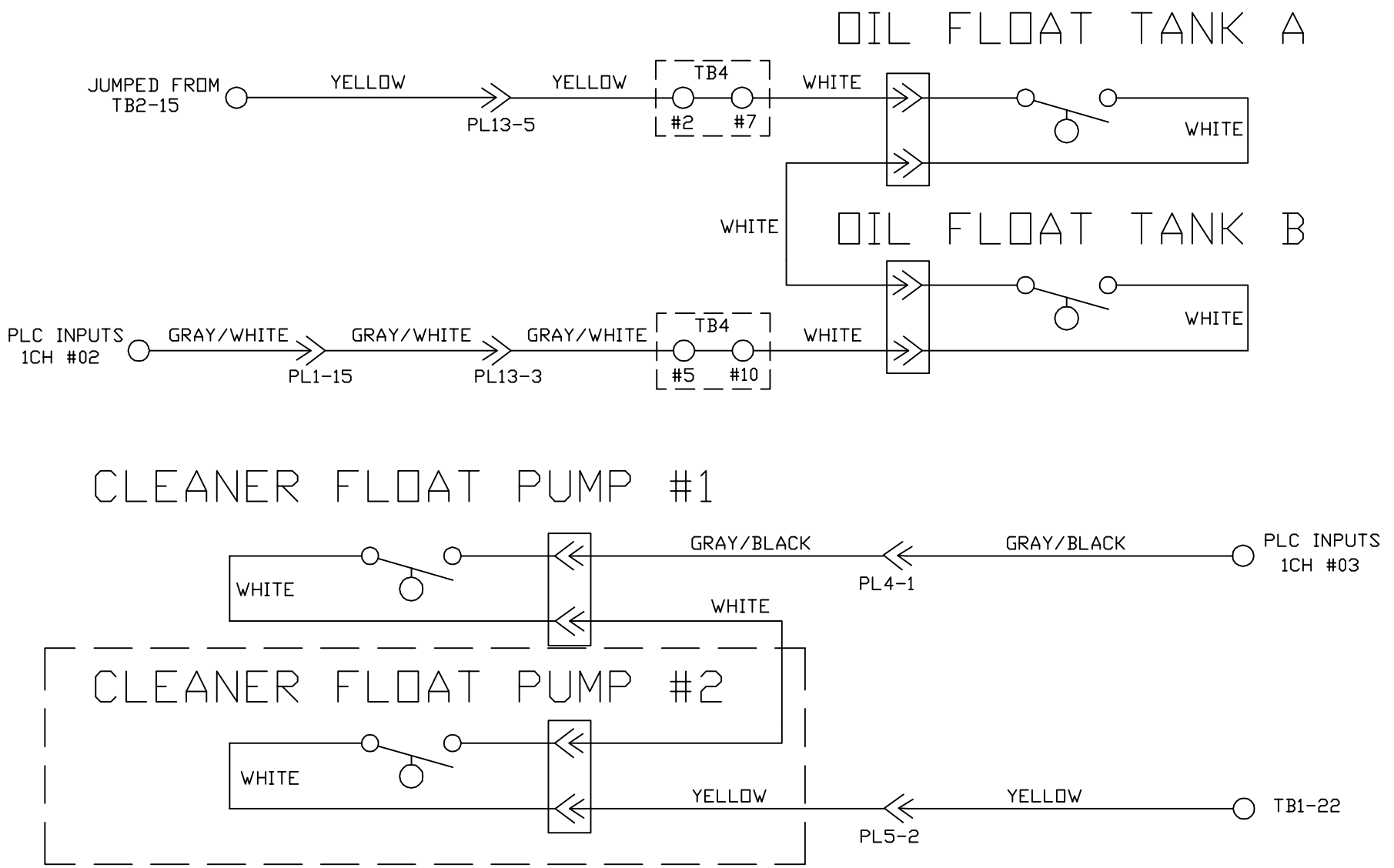


| | | | |
|---|---|---|---|
| MATERIAL: N/A | | THE KEGEL CO. 1951 LONGLEAF BLVD. LAKE WALES, FL 33859 (863) 734-0200 | |
| DRAWN BY: SLS | DATE: 07/23/18 | DESCRIPTION: OIL FLOATS & CLEANER FLOATS WIRING<br>DO NOT SCALE DRAWING | |
| APPROVED: MP | REV DATE: | SIZE: A | QTY/MACHINE: N/A |
| DOC REV: | | SCALE: N/A | PART NUMBER: FLEX WALKER 2019<br>SHEET: 23 OF 27 |

281

# SPEED TACH PROX

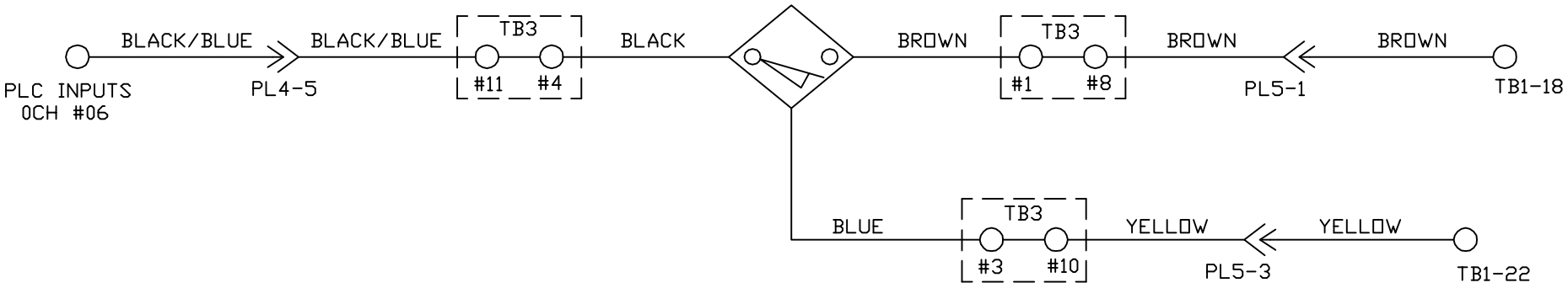


# LANE DISTANCE PROX

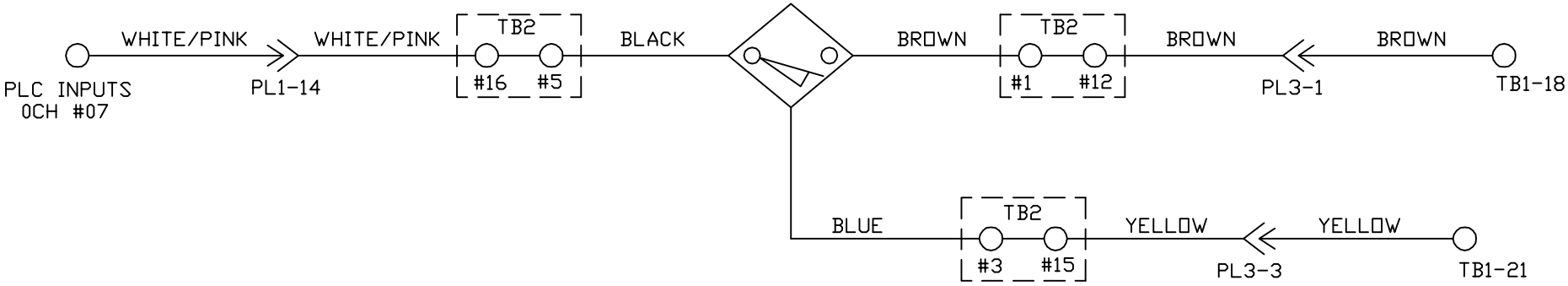


| | | | |
|---|---|---|---|
| MATERIAL: N/A | | THE KEGEL CO. 1951 LONGLEAF BLVD. LAKE WALES, FL 33859 (863) 734-0200 | |
| DRAWN BY: SLS | DATE: 07/23/18 | DESCRIPTION: SPEED TACH & LANE DISTANCE WIRING DO NOT SCALE DRAWING | |
| APPROVED: MP | REV DATE: | SIZE: A | QTY/MACHINE: N/A — PART NUMBER: FLEX WALKER 2019 |
| DOC REV: | | SCALE: N/A | SHEET: 24 OF 27 |

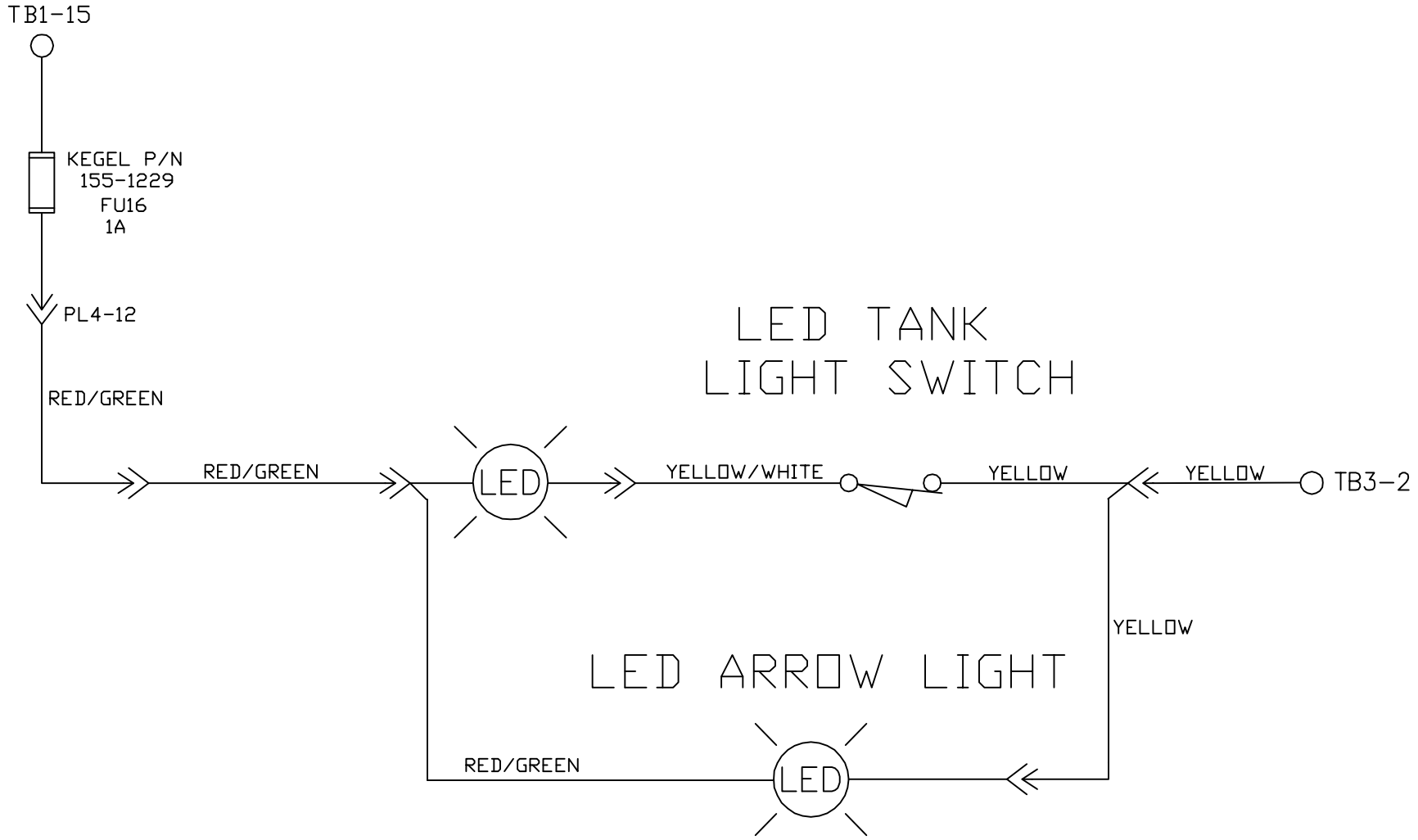


| | | | |
|---|---|---|---|
| MATERIAL: N/A | | THE KEGEL CO. 1951 LONGLEAF BLVD. LAKE WALES, FL 33859 (863) 734-0200 | |
| | | DESCRIPTION: LED TANK LIGHT WIRING | |
| DRAWN BY: SLS | DATE: 07/23/18 | DO NOT SCALE DRAWING | |
| APPROVED: MP | REV DATE: | SIZE: A | QTY/MACHINE: N/A |
| DOC REV: | | SCALE: N/A | SHEET: 25 OF 27 |

PART NUMBER: FLEX WALKER 2019

# ADS PROX 7-PIN SIDE

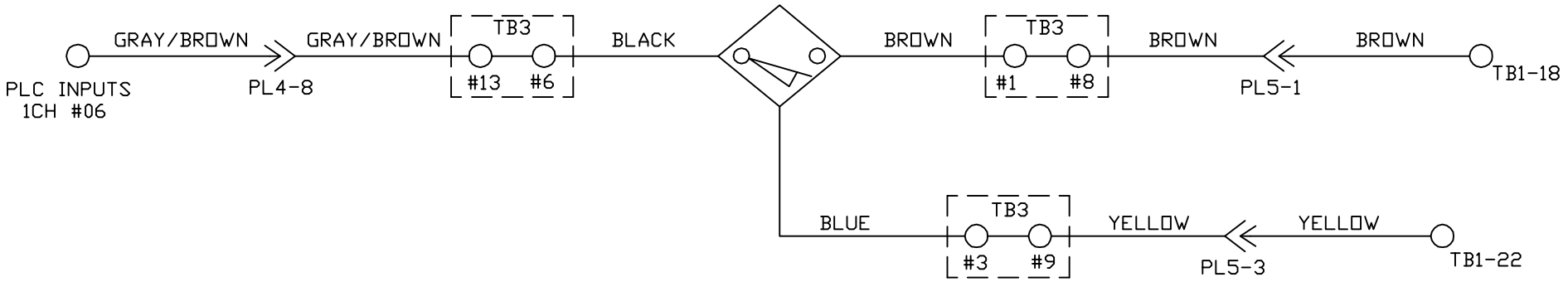


# ADS PROX 10-PIN SIDE

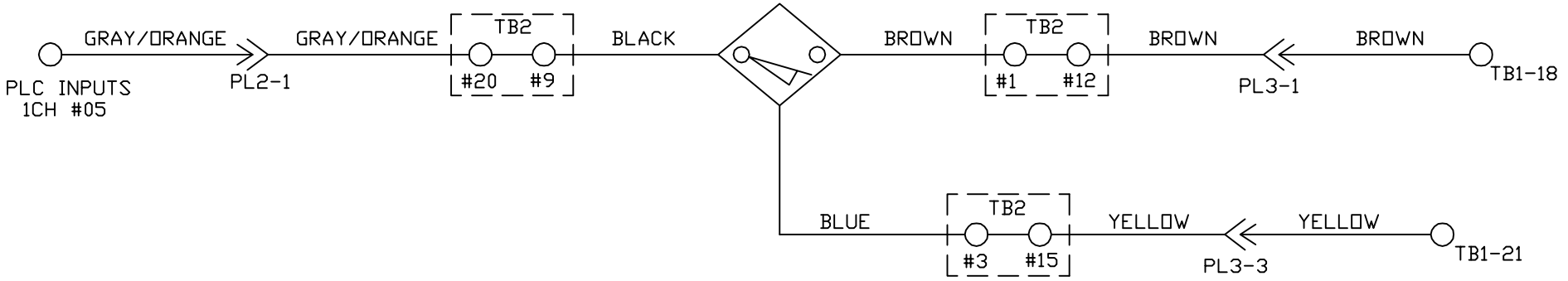


| | | | |
|---|---|---|---|
| MATERIAL: N/A | | THE KEGEL CO. 1951 LONGLEAF BLVD. LAKE WALES, FL 33859 (863) 734-0200 | |
| DRAWN BY: SLS | DATE: 07/23/18 | DESCRIPTION: ADS WIRING 7-PIN & 10-PIN SIDE DO NOT SCALE DRAWING | |
| APPROVED: MP | REV DATE: | SIZE: A | QTY/MACHINE: N/A |
| DOC REV: | | SCALE: N/A | PART NUMBER: FLEX WALKER 2019 |
| | | | SHEET: 26 OF 27 |

284

# ADS PROX 7-PIN SIDE

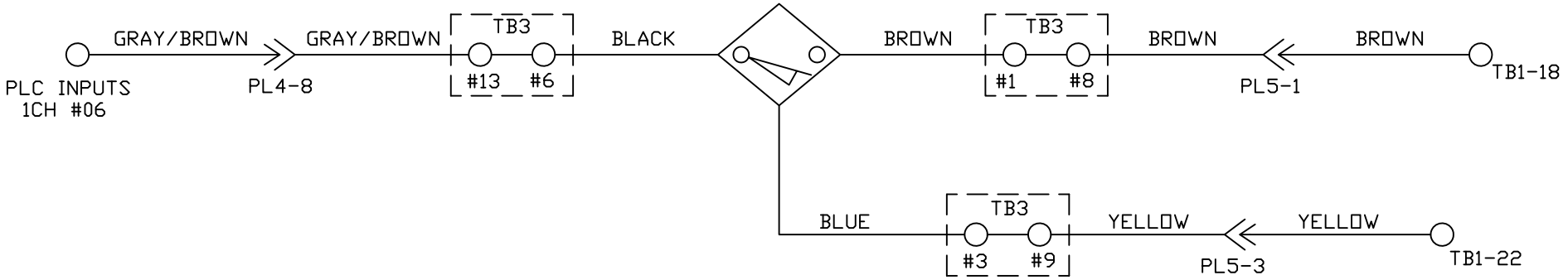


# ADS PROX 10-PIN SIDE

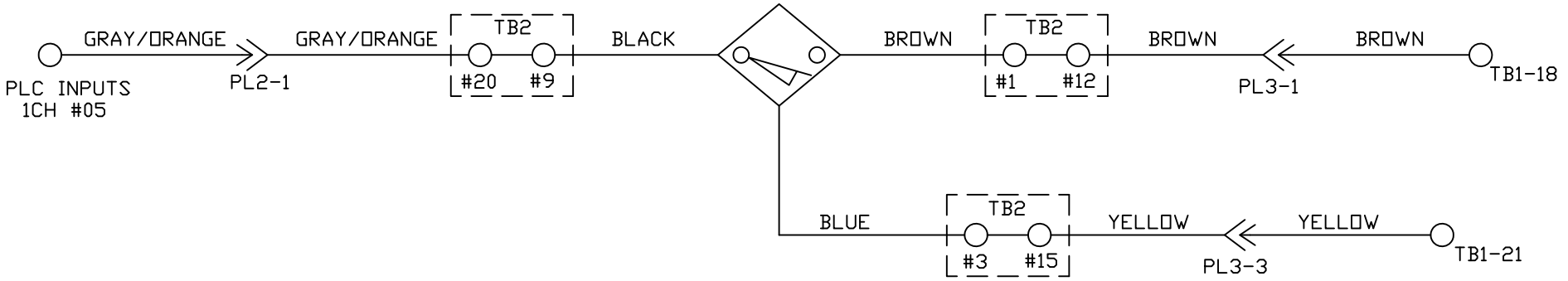


| | | | |
|---|---|---|---|
| MATERIAL: N/A | | THE KEGEL CO. 1951 LONGLEAF BLVD. LAKE WALES, FL 33859 (863) 734-0200 | |
| DRAWN BY: SLS | DATE: 07/21/15 | DESCRIPTION: ADS WIRING 7-PIN & 10-PIN SIDE DO NOT SCALE DRAWING | |
| APPROVED: MP | REV DATE: | SIZE: A | QTY/MACHINE: N/A — PART NUMBER: FLEX WALKER 2016 |
| DOC REV: | | SCALE: N/A | SHEET: 26 OF 27 |

285

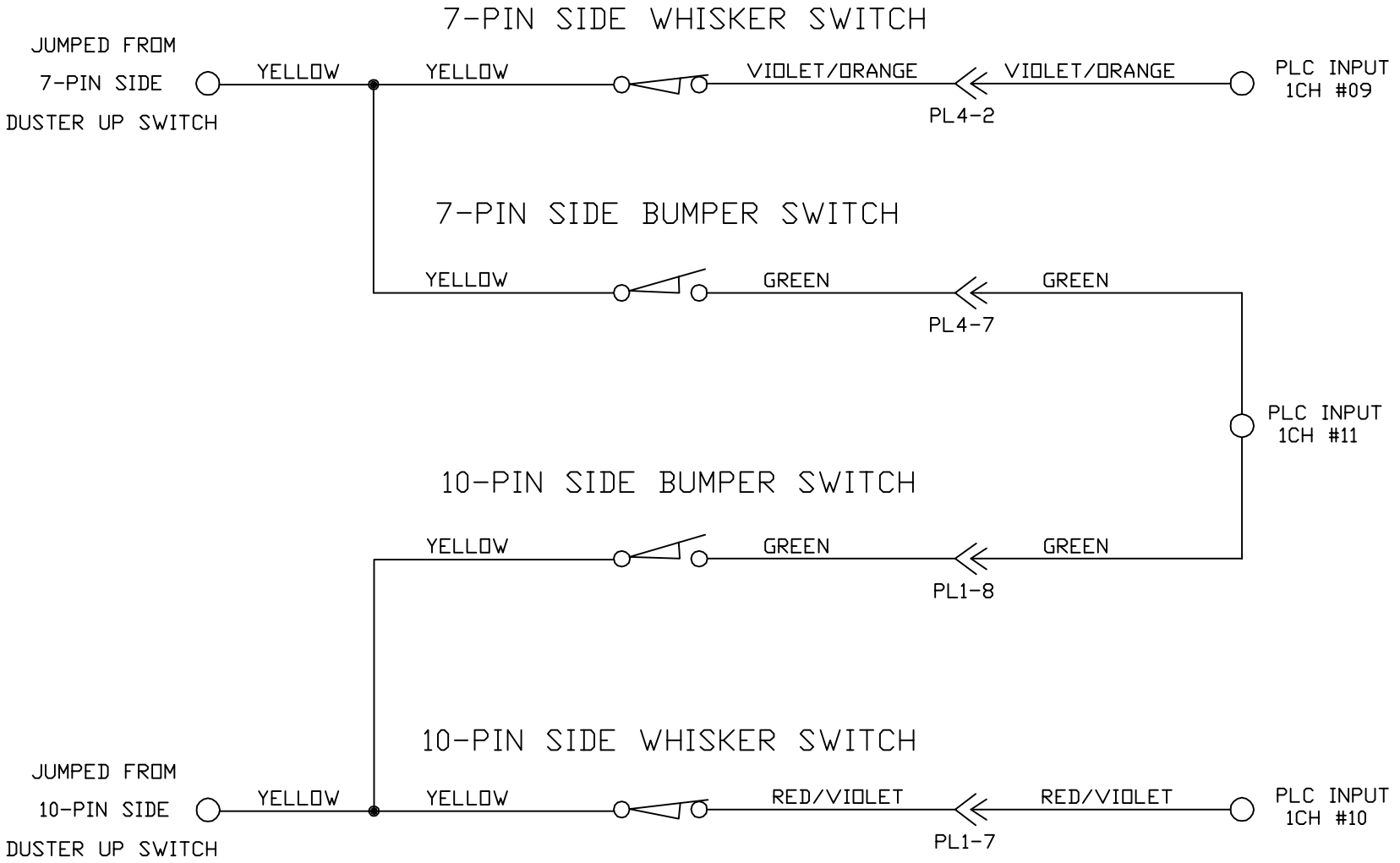


| | | | |
|---|---|---|---|
| MATERIAL: N/A | | THE KEGEL CO. 1951 LONGLEAF BLVD. LAKE WALES, FL 33859 (863) 734-0200 | |
| DRAWN BY: SLS | DATE: 07/23/18 | DESCRIPTION: BUMPER & WHISKER SWITCH WIRING<br>DO NOT SCALE DRAWING | |
| APPROVED: MP | REV DATE: | SIZE: A | QTY/MACHINE: N/A |
| DOC REV: | | SCALE: N/A | PART NUMBER: FLEX WALKER 2019<br>SHEET: 27 OF 27 |